J.R. MILNE.

THE VISCOMETRIC DETERMINATION of SOMATIC CELL LEVELS in COWS' MILK.

Submitted for the degree of

MASTER of SCIENCE

in

BIOLOGICAL SCIENCES

at

University of Waikato
HAMILTON
NEW ZEALAND
1973

"...*find out*
the cause of this effect,"

"Hamlet"
Act II Scene 2

TABLE OF CONTENTS

Page

Index of Tables 3 - 4

Index of Figures 5 - 7

Acknowledgments 8 - 9

Abstract 10 - 11

Introduction

General 12 - 13

Changes in Milk Composition 13 - 15

Importance of Somatic Cell Content to the Dairy Industry 15 - 17

Detection of Somatic Cells 17 - 18

Rheological Considerations

History of the Development of the Laws of Resistance to fluid motion 19 - 26

The Ruakura Rolling Ball viscometer 26 - 34

Standardisation of the Ruakura Rolling Ball viscometer 34 - 43

Detection of Somatic Cells in Bulk Milk

Microscopic Counting Methods 44

Chemical Estimation of Somatic Cells 45 - 46

Indirect Estimation of Somatic Cells 46 - 48

Use of the Ruakura Rolling Ball viscometer to measure the viscosity of the CMT reaction 48 - 59

Time course of the viscometric reaction 59 - 61

Nature of the Reaction of Somatic Cells with a secondary alkyl sulphate

The role of DNA in the reaction 62 - 66

Viscosity developed by Somatic Cells suspended in Normal Saline 67 - 71

Influence of other Milk Constituents on viscosity 72

Effect of proteins on the viscosity developed in model systems containing milk and added somatic cells. 73 - 77

Reaction of somatic cells with Teepol 77 - 85

TABLE OF CONTENTS (Contd)

Page

Practical considerations for use of Ruakura Rolling Ball viscometer

Age of milk sample being tested 86 - 90

Preservatives for milk samples 91-92,93

Effect of different operators 92 - 99

Operating system for 120 samples per hour 99

Viscometer with electronic control system 104 -107

Conclusions 108 -110

References 111 -128

Appendices

(1) Physical Theory of Ruakura rolling ball viscometer 129 -131

(2) Direct Microscopic Somatic Cell Count (DMSCC) 132 -135

(3) Chemical Estimation of Somatic Cells 136 -141

(4) California Mastitis Test 142 -145

(5) Trivariate Linear Regression 146 -148

(6) Kendall coefficient of concordance 149 -150

(7) Comparison of Ruakura rolling ball viscometer with Ferranti viscometer 151 -157

(8) Data used in linear regressions 158 -160

(9) Data on milk aging 161 -164

(10) Glossary of some Abbreviations and Symbols. 165

TABLES Page

1. Relationship of milk cell counts to Production Losses 16
2. Glycerol standards after Sheely (1932) 35
3. Results obtained with Ruakura rolling ball viscometer on testing with standard Glycerol solutions 36
4. Predictions of viscosity from derived equations 43
5. Relationships between Viscometer Reading and Direct Microscopic Somatic Cell Count 55
6. Viscosity of the CMT gel as determined by the Ruakura rolling ball viscometer at various times after the addition of the reagent. 60
7. Viscosity developed by somatic cell suspensions after addition of the reagent 70
8. The effect of proteins on the estimate of viscosity as recorded by the Ruakura rolling ball viscometer 75
9. The effect of resuspending leucocytes in different diluent solutions on the viscosity developed by the Ruakura rolling ball viscometer 76
10. Direct Microscopic Somatic Cell Counts of milk samples used in experiments to determine operator effects on the Ruakura rolling ball viscometer 95
11. Standard deviations and correlation coefficients for five operators testing a standard series of 10 samples of the Ruakura rolling ball viscometer 96
12. Results obtained by different operators on ten samples of herd milk with the Ruakura rolling ball viscometer 97
13. Ten milk samples arranged by ranking 98
14. Randomised Latin Square experimental design 100
15. Results obtained by different operators on ten samples of herd milk with the Ruakura rolling ball viscometer, Latin Square design 101
16. Milk samples from Latin Square design after arranging ranks by operators 102
17. Reaction classes of CMT reaction (Appendix 4) 144
18. Variability of operator rankings in CMT reaction (Appendix 4) 145

TABLES (Contd) Page

19. Summary of comparison of Ruakura rolling ball viscometer and Ferranti viscometer 154

20. Comparison of Ruakura rolling ball viscometer and Ferranti viscometer on the same samples of milk 155

21. The results obtained by different operators on samples of herd milk with the Ferranti viscometer 156

22. Milk samples tested on Ferranti viscometer after ranking by operators 157

FIGURES

Page

1. Rolling ball viscometer developed by Flowers (1914) 22
2. Hoppler viscometer as used by Carre (1970) to measure the viscosity of the CMT gel. 24
3. General view of the Ruakura rolling ball viscometer with the tube in the operating or tilted position. 27
4(a) A view of the Ruakura rolling ball viscometer with the case removed. 28
4(b) Diagram of the Ruakura rolling ball viscometer with the case removed. 29
5. Detailed view of the Ruakura rolling ball viscometer. 30
6. The viscometer tube assembly. 32
7. The pinch valve assembly. 33
8. Relationship between viscosity (centipoise) and viscometer reading. 37
9. Relationship between inverse of Viscometer Reading and viscosity (centipoise). 38
10. Relationship between inverse of Viscometer Reading (between limits 10 > VR > 1) and viscosity (centipoise). 40
11. Graphical comparison of the equations derived from Stokes' Law and from linear regression. 42
12. Schematic representation of method of operating Ruakura rolling ball viscometer. 50
13. Measurement of milk samples. 51
14. Addition of the reagent. 52

FIGURES (Contd)

Page

15. Introducing sample to the Ruakura rolling ball viscometer. 53
16. Operation of Ruakura rolling ball viscometer. 54
17. Graph showing relationships between Viscometer Reading and Direct Microscopic Somatic Cell Count. 57
18. The effect of holding time after addition of reagent on the viscometer reading. 61
19. Graph showing relationships between Viscometer Reading and DNA content of the milk sample. 65
20. Graph showing DNA content related to viscosity. 66
21. Graph showing viscosity developed by somatic cells in normal saline. 71
22. Appearance of somatic cells in milk smears diluted 1:1 with normal saline. 80
23. Somatic cells in milk after dilution 1:1 with Triton - X - 100. 81
24. Somatic cells in a low concentration of Teepol. 82
25. Somatic cells in a higher Teepol concentration showing changes in the margins of the cells. 83
26. Somatic cells showing fibril formation. 84
27. Extensive fibrillar networks. 85
28. Graph showing decrease in viscosity with increasing milk age. 88
29. Increase in DNA content with increasing milk age. 89
30. Graph showing increase in total bacterial count with increasing age of milk sample. 90
31. The effect of boric acid used as a preservative in milk samples for viscometric examination. 93

FIGURES (Contd) Page

32. Operating system for two viscometers giving a throughput of 120 samples per hour. 103

33. View of a Ruakura rolling ball viscometer controlled by Pye high level logic. 106

34. Control circuit for the Ruakura rolling ball viscometer with Pye high level logic. 107

35. Coefficients of variation for Direct Microscopic Cell Count (Appendix 2). 135

36. Graph showing relationship between DNA content and Direct Microscopic Somatic Cell Count (Appendix 3). 141

ACKNOWLEDGMENTS

I am grateful for assistance from many people during the course of this study.

To the Dairy Division, Ministry of Agriculture and Fisheries who allowed my secondment to the Ruakura Agricultural Research Centre and later the Waikato Dairy Laboratory:

Professor J. Pendergrast for assisting in my undertaking an M.Sc. course at the University of Waikato:

Dr W.G. Whittlestone, my Supervisor, for his constant advice and encouragement:

The staff in the Biological Sciences School, University of Waikato for their assistance in course work:

Hank de Langen who assisted with the DNA analysis and the drawing of figures:

The staff of the Waikato Dairy Laboratory, particularly Alan Twomey, Michel Joerin, Bill Crawley, Mrs Marilyn Embling and Mrs Linda Derrick, and all the personnel whose encouragement and discussion have been invaluable:

The staff of the Physiology and Hygiene Section, Ruakura especially Mike Mullord for allowing me to use his cows and Lyn Cate who built the viscometers:

Dr E.W. Wright who has aided and abetted from Head Office:

Dave Duganzich of the Biometrics Section for hours of patient assistance:

Don Macqueen for the photographs and developing and printing the photomicrographs:

The Ruakura staff, particularly the library staff; Mrs Henrickson and the Administration staff:

My family, especially Barbara, whose faith has been strong.

Without the goodwill and co-operation of all these people, and many others, this study could not have been undertaken. I am truly grateful.

ABSTRACT

The California Mastitis Test (CMT) is a test used for estimating the number of somatic cells in a milk sample. A reagent (secondary alkyl sulphate) is added to the milk and the number of somatic cells estimated from the resultant viscosity of the mixture.

The Ruakura rolling ball viscometer has been developed to measure the viscosity of the CMT gel. It consists of a tube mounted horizontally so that the milk-reagent mixture can be introduced into it. After a holding time of 26 seconds the tube tips through an angle of 25° allowing a stainless steel ball to roll through the mixture for a standard time before returning to the horizontal. The distance the ball has rolled is inversely related to the viscosity developed. The physical function of the viscometer follows Stokes' Law.

The range of the instrument is suited to reading the viscosity developed by the CMT reaction in New Zealand herd milks.

The viscous reaction in milk is caused by somatic cell nuclei forming a fibrillar network. The reaction intensity is related to the DNA content of the milk sample. Proteins can modify the viscosity developed. Bacterial DNA does not enter the reaction. The network is fragile and rheomalaxic in nature.

The reaction intensity in milk varies with time. An approximate 25 second holding time is required before determining the viscosity. After this holding time the reaction intensity progressively decreases. Milk to be tested should be under 24 hours old although refrigeration or boric acid preservative can extend this time.

Different operators can rank milk samples by somatic cell count in a similar order with the Ruakura rolling ball viscometer.

There is a significant correlation ($r = 0.92^{***}$) between Ruakura rolling ball viscometer and somatic cell count of herd milk samples.

INTRODUCTION

GENERAL

Enumeration of somatic cells in herd milk is becoming an increasingly important facet of milk quality. International attention has been focused on this factor and several countries, notably the U.S.A., Japan and the E.E.C. bloc, have set legal limits for the number of somatic cells in milk.

Somatic cells are defined as the cells of an organism, other than the germ cells ("A Dictionary of Biology", Penguin Books, 1962). When applied to milk this term refers to cells present in the milk that had their origin as blood cells; specifically white blood cells. This second term can be regarded as synonymous to somatic cells for milk, and usually when referring to milk somatic cells includes cells shed from the secretory tissue of the udder.

Somatic cells are normally present in milk (Sinell and Neuschultz, 1965; Cullen, 1966) but elevated numbers of somatic cells in a cow's milk indicate a disturbance of normal secretory activity. An increased number of somatic cells in milk is a sensitive indicator of changes in the chemical and physical properties of the milk and of decreased milk yield.

The number of somatic cells in milk is a measure of the functional state and health of the mammary gland from which it was drawn (Tolle *et al.*, 1971). Boland (1964) has theorised that the somatic cell content of milk is important enough to be used as an index of quality, complementing bacterial count standards. Janzen (1971) found a significant relationship between a presumptive method of estimating somatic cell content and total bacterial contamination. Aetiological factors may also be estimated quantitatively from cell counts; e.g. the different pathogenicity of mastitis organisms (Tolle, 1970), and a close relationship to histological findings has been demonstrated (McFarlane et al., 1949; Hess and Egger, 1969).

CHANGES IN MILK COMPOSITION AS SOMATIC CELL CONTENT INCREASES

The alveolar epithelial cells of the mammary gland have very specific activities. They synthesise lactose, γ-casein, milk fat, α-lactalbumin and β-lactoglobulin and are also active in the transfer of κ-casein, immune globulins, blood serum albumin, vitamins, trace elements and minerals from the bloodstream to the milk (Schalm, 1962). These cells are normally subjected to continuous high wear and must be continuously replaced. The worn cells and cell debris are discharged with the milk and are thus a regular and normal component of that milk. When milk secretion is reduced, at the end of lactation or as a result of an infection, milk composition can be altered. The pathogenic organisms that can cause this disturbed secretion are mainly staphylococci; groups B, C and E streptococci and numerous other micro-organisms. The action of these micro-organisms in causing infections is aggravated by physical damage during milking and other traumatic factors. Penetration of micro-organisms into the parenchyma of the mammary gland is responsible for the migration of somatic cells with phagocytic activity from

Addendum 1: p. 13 2nd sentence after heading:

"They synthesis lactose, milk fat, caseins, alpha-lactalbumin and beta-lactoglobulin and are also active in the transfer of blood serum albumin and immune globulins, vitamins ...... milk."

the epithelium of the ducts and acini before mobilisation of leucocytes takes place (Cullen, 1966a). The degree of cellular response is likely to be proportional to the severity and type of the infection (Pattison and Smith, 1953; Klastrup, 1956).

Milk is an active biochemical entity and as such its normal composition is difficult to define.

Changes in protein are marked as somatic cell content increases. Radioactive trace experiments have shown that the milk proteins, γ-casein, α-lactalbumins and β-lactoglobulin are synthesised in the udder while the immune globulins, blood serum albumin and κ-casein permeate directly from the blood (Schalm, 1962). In abnormal milk the β-casein content decreases but blood serum albumins, immune globulins, β-lipoproteins and γ-casein increase (Ashworth, 1966; Heeschen, 1966; Northen, 1970; Suteu and Giurgea, 1971). Many minor proteins, particularly enzymes, also increase as the cell content becomes elevated (Nilsson, 1957; Cullen, 1966; Taylor and Kitchen, 1970; Kitchen, 1971).

Most changes in milk composition associated with milk abnormality are attributable to the altered permeability of the cell membranes separating blood and milk. Normally blood and milk are in osmotic equilibrium.

<u>Addendum 2</u>: p. 14 3rd paragraph 2nd sentence:

"Radioactive tracer experiments have shown that the milk proteins alpha-, beta- and kappa-caseins, alpha-lactalbumin and beta-lactoglobulin are synthesised in the udder while other proteins such as blood serum albumin and immune globulins permeate .... blood."

add sentence

"gamma-casein once thought to be formed in non-mammary tissue and transfer by the mammary gland to the milk (Schalm 1962) is now known to be a product of the action of milk protease on beta-casein (Gordon et al., 1972; Kaminogawa and Yamauchin, 1972)."

Almost all changes in milk composition have at some time been advocated as diagnostic aids for the detection of abnormal milk.

IMPORTANCE OF SOMATIC CELL CONTENT OF BULK MILK TO THE DAIRY INDUSTRY

The somatic cell content of herd milk is an important index of milk quality from two points of view.

Firstly it is a good indication to the farmer of the health status of the cows in his herd. Mastitis causes an estimated loss of $16,000,000 annually to the national dairy income (Brookbanks, 1970) and Brander (1972) reports the findings of Booth (1971) showing how herd milk somatic cell counts can be related to the level of mastitis in a dairy herd and also an estimate of milk production losses. Booth's (1971) results are shown in Table 1.

Secondly the importance of somatic cell content of bulk milk in dairy manufacturing makes this index of milk quality of considerable importance to the dairy industry, especially in the light of developing market considerations.

The level of somatic cells affects product quality. Janzen (1972) and Janzen and Northern (1972) have demonstrated flavour defects correlated to somatic cell concentration in pasteurised milk. Organoleptic scores are lower in butter made from high cell content bulk milk; deterioration becoming obvious as perceptible signs of oxidation effects (Kiermeier and Keis, 1964a; Brus *et al*., 1966). In cheese production elevated somatic cell levels decrease the ability to form lactic acid (Knauer, 1931; Davis and MacClement, 1939; Kiermeier and Keis, 1964a,b; Kiermeier and Probst, 1968; Hampton and Randolph, 1969; Feagen *et al*., 1970; Martens *et al*.,1971; Chapman and Burnett, 1972)

Bulk milk cell count cells/ml	Estimate of Mastitis problem	Estimated milk production loss per cow per year gallons
250,000	Negligible	-
250,000 - 500,000	Slight	42
500,000 - 750,000	Average	74
750,000 - 1,000,000	Bad	160
Over 1 million	Very bad	197

TABLE 1 Relationship of milk cell counts to Production losses in Lancashire and Cheshire from Brander,(1972).

although this can be overcome by addition of calcium chloride (Hietaranta, 1962; Martens _et al._, 1971). Organoleptic defects have also been demonstrated in cheese made from high cell content milk (Kiermeier and Keis, 1964a; Brus and Jaartsveld, 1971a). Martens _et al._, (1971) did not entirely support these findings.

Milk powder made from milk with elevated levels of somatic cells is less heat stable than milk powder made from normal milk (Feagen _et al._, 1966, 1970; Kisza and Kruk, 1970) and organoleptic defects have been demonstrated (Brus, and Jaartsveld, 1971b).

DETECTION OF SOMATIC CELLS

There are many methods, both direct and indirect, for estimating the somatic cell content of milk. Of the direct methods, Direct Microscope Somatic Cell Counting (DMSCC), Electronic Somatic Cell Counting and Chemical estimation of the DNA content of the milk sample would be the most commonly used. The indirect methods measure some other chemical change in milk composition - or rely on some physical change in the structure of the milk after a suitable reagent is added. One of the most popular of these tests is the California Mastitis Test (CMT) which subjectively assesses changes in the viscosity of the milk after a reagent (Alkyl aryl sulphonate or secondary alkyl sulphate) has been added. This method is very cheap and quick.

Many attempts have been made to make the scoring of the CMT more objective. One major line of approach has been that of rheology - or observations of the differences in flow properties or viscosity of the milk-reagent mixtures. Many types of flow-through viscometers and several mechanical viscometers have been used. Many of these methods have severe limitations for use in measuring the CMT 'scores' of herd milks as the range of viscosity developed is relatively small.

A new type of viscometer has been developed to measure the viscosity of the CMT gel. It uses the rolling ball principle first described by Flowers (1914). This new viscometer, the Ruakura rolling ball viscometer, is unique in its system of control. Whereas all previous rolling ball viscometers have measured the rate of roll of the ball (either as a velocity or as a time to travel a fixed distance) this new type of viscometer measures the distance rolled in a fixed time.

The Ruakura rolling ball viscometer is described and a brief history of the physical laws governing its operation are given in the following sections.

RHEOLOGICAL CONSIDERATIONS

HISTORY OF DEVELOPMENT OF THE LAWS OF RESISTANCE TO FLUID MOTION

The subject of fluid resistance has a very respectable history, dating from the time of Gallileo. Gallileo (in "Oeuvres de Gallileo" Edition de 1718, Vol. 2, Florence) in expressing the laws for falling bodies, appreciated that even air would oppose motion, but as the effects were small for the falling bodies with which he was dealing it was sufficient for his purposes to consider the air resistance as a negligible correction.

Newton's principal interest in the subject was in connection with the laws of falling bodies. In "Philosphiae Naturalis Principia Mathematica" Edition 1687, Book II, propositions 1, 2 and 3 he stated the laws of motion for a body opposed by a resistance increasing directly as the velocity, but concluded with the statement that this form of resistance was more a mathematical hypothesis than a physical one.

Newton took care to state that the law of resistance, varying as the density of the liquid and the square of the velocity, held only approximately, and for bodies moving swiftly. He also pointed out that tenacious fluids of equal density would offer more resistance than easy flowing liquids, as cold oil more than hot oil, warm oil more than water, and water more than spirits of wine. This is probably the first grading of liquids in order of their viscosities.

Coulomb in "Histoire de l'Acadamie" (1784) was the first to put the laws of the resistance of fluid motion on the basis of proved experimental fact. It can be concluded from Coulomb's research that there are two main causes of fluid resistance, namely internal friction or viscosity, and inertia. It can also be concluded that the viscous resistance is directly proportional to the relative viscosity of the parts of the fluid, directly proportional to the surface involved, and independent of the pressure and of the surface conditions of the boundaries.

Poiseuille became interested in the laws governing the flow of blood through the capillaries, and conducted experiments on the flow of water through glass capillaries (Acadamie de Sciences, Reccueuil des Savants Etrangers, 1842, Année, 1846). Many present day viscometers are based on this work (i.e. Ostwald capillary viscometer).

About 1851 Stokes published a theoretical calculation of the viscous resistance offered by fluids to the motion of solid bodies of various shapes. Stokes was directly interested in the pendulum corrections due to air resistance. One of the important cases solved was the resistance to the motion of a sphere falling through a viscous fluid of indefinite extent. He derived the following expression for the resistance:

$$R = 6\pi\eta r = 3\pi\eta d$$

Equating this to the force of gravity for a freely falling sphere he obtained the terminal or limiting velocity:

$$V = \frac{2}{9}\frac{r^2 g}{\eta}(\rho_s - \rho_m) = \frac{1}{18}\frac{d^2 g}{\eta}(\rho_s - \rho_m)$$

where $d =$ diameter of sphere (cm) $= 2r$

$g =$ acceleration due to gravity

$\eta =$ absolute viscosity

$\rho_s =$ density of sphere (g/cc.)

$\rho_m =$ density of medium (g/cc.)

This expression is known as STOKES LAW. (Mathematical and Physical Papers, Cambridge University Press 3 55 (1880)).

One of the applications of Stokes Law has been to determine the viscosity from the velocity of travel of a rolling ball down an inclined tube filled with a liquid. This application was first proposed and used by Flowers (1914). A diagram of the viscometer used by Flowers is shown in figure 1. Flowers found in general that fluid resistance must be expressed by at least two terms - one term giving the viscous resistance and the other a correction for inertia. The inertia term considers the density of the liquid and the square of the velocity as deduced by Newton. Flowers did not attempt to evaluate his inertia term and tried to work at velocities at which it was negligible.

Mathematical models for the rolling ball viscometer have been proposed by Hubbard and Brown (1943), Lewis (1953) and Bird and Turian (1964).

Rolling ball viscometers have been used for several specialist applications; for measuring the viscosity of gases under pressure (Kiyama and Makita, 1951, 1952, 1956; Makita, 1954; Kiyama, 1955), for fluids under pressure (Horne and Johnson, 1966; Stanley and Batten, 1968), and also at high temperatures (Harrison and Gosser, 1965) and

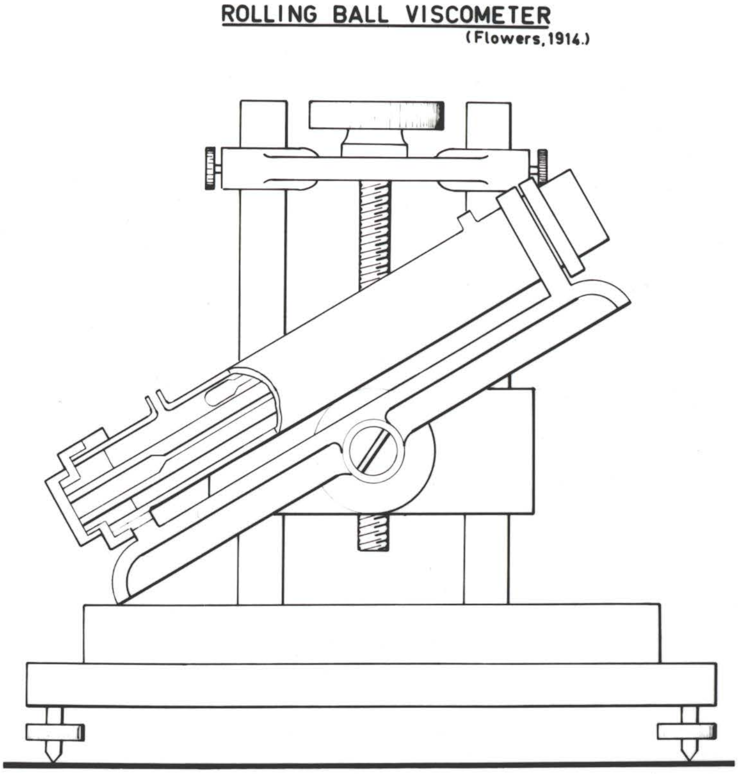

ROLLING BALL VISCOMETER
(Flowers, 1914.)

FIGURE 1

Rolling ball viscometer developed by Flowers (1914) also for measuring the viscosity of blood (Copley et al., 1942; Copley and Thorley, 1960). A large scale version of a rolling ball viscometer has been used to determine viscosity in the field and the results compared favourably with more complicated methods (Kuz'menko and Bogorad, 1958).

Scott Blair and Oosthuizen (1960) described the application of a rolling ball viscometer in determining the viscosity of a thixotropic structured liquid; the gel formed by milk after the addition of rennet. Rolling ball viscometers have been advocated to measure the viscosity of the CMT reaction in milk (Whittlestone and Fell 1965; Whittlestone and Allen, 1966; Whittlestone et al., 1970, 1972; Fell et al., 1971; Whittlestone, 1971; Brookbanks et al., 1972; Whittlestone and Milne, in preparation).

Keirmeier and Keis (1964c) were the first to use a falling ball instrument to measure the time required for a ball of known density to fall a certain distance through a column containing the CMT mixture. This allowed more precise differentiation of the gel strength than objective scoring and they reported an "accordance between the method and the cell content of milk".

Renner et al., (1967) found a correlation of 0.958 between cell count and the viscosity as measured by this type of instrument. Carré (1970) used a Höppler viscometer (figure 2) to measure the viscosity of the CMT gel. This type of viscometer has been used to determine the viscosity of milk (Fernández-Martín, 1972) but this type of viscometer is not suitable for routine determination of the viscosity of the CMT gel (Fernández-Martín, personal comment).

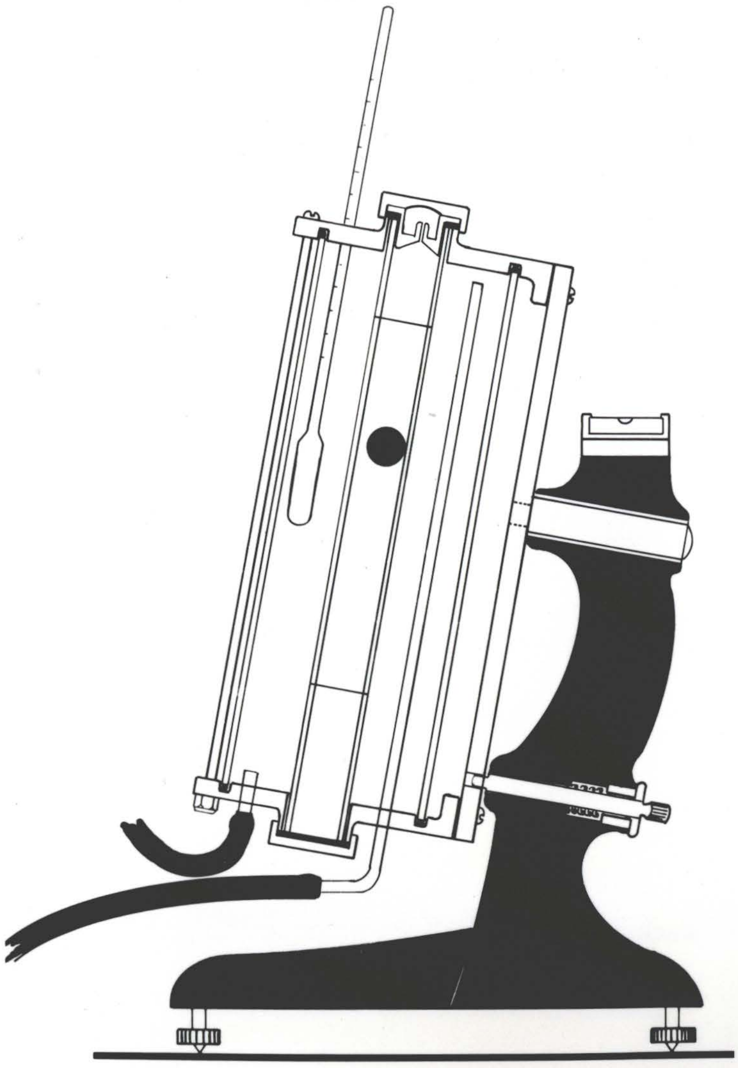

FIGURE 2

Höppler viscometer as used by Carré (1970) to measure the viscosity of the CMT gel.

Nageswararao and Calbert (1969) used a Fischer electro-viscometer to measure the viscosity of the CMT gel and found a correlation of 0.65 with viscosity and log (cell count). Nichols (1970) has developed a Ferranti type viscometer to measure the viscosity of the CMT gel. A description of this instrument and its use in this application is given by Nichols and Phillips (1972) who found a correlation of 0.99 with viscometer reading and log (cell count), on the six samples studied. It is claimed this instrument has an advantage in that it measures the maximum viscosity of the milk reagent mixture. A comparison of the Ruakura rolling ball viscometer with the Ferranti viscometer is shown in Appendix 7.

Determination of the viscosity of the CMT gel is difficult because as at moderate shear forces the gel is destroyed. As this process is irreversible the CMT gel would properly be described as rheomalaxic (Scott Blair, 1969). Any instrument used to measure the viscosity of the CMT gel must apply a small shear force and that only once in the course of a measurement.

Scott Blair and Oosthuizen (1960) developed a rolling ball viscometer for structured liquids. Relative viscosities of glycerine-water solutions and fat-free milks determined in this type of viscometer agree reasonably with those from an Ostwald or other capillary viscometer. In determining the structure of renneted milk, even before rigidity sets in, the structure is damaged by the drastic shearing in Ostwald or capillary viscometers and the rolling ball viscometer gives a more reliable picture of viscosity changes.

The characteristics of the instrument are determined by Stokes Law and the form of the equation is determined from dimensional considerations. But, in fact, the stress conditions around the sphere are very complex and the calculation of the appropriate constants is controversial (Scott Blair, 1969).

A rolling ball viscometer to determine the viscosity developed in the CMT reaction has been developed and is described below.

THE RUAKURA ROLLING BALL VISCOMETER

The viscometer is shown in figure 3.

A general view of the instrument with the case removed is shown in figures 4a and 4b. The sample to be tested is poured into the small filter funnel (a) and can then flow along the viscometer tube (b) when the pinch valve (c) is opened and through a length of rubber tubing to waste. The tilting of the tube is controlled by a small synchronous motor (d) which is switched on and off by a micro-switch (e). When the motor is running the indicator lamp (f) is lighted.

Figure 5 shows the components of the instrument. The viscometer tube consists of a portion of precision bore glass tubing 22 cm. in length with an internal diameter of 5.5 mm. This tube is held by appropriate holders at the ends to which the inlet and outlet tubes can be attached. Inside this tube is a stainless steel ball of 4.7 mm. diameter and weighing 0.4 gm. Small stainless steel stop pins located in these holders prevent the ball from blocking the ends of the tube. This tube is fitted to a carriage with a levelling glass so that before determinations are carried out the tube is brought to the

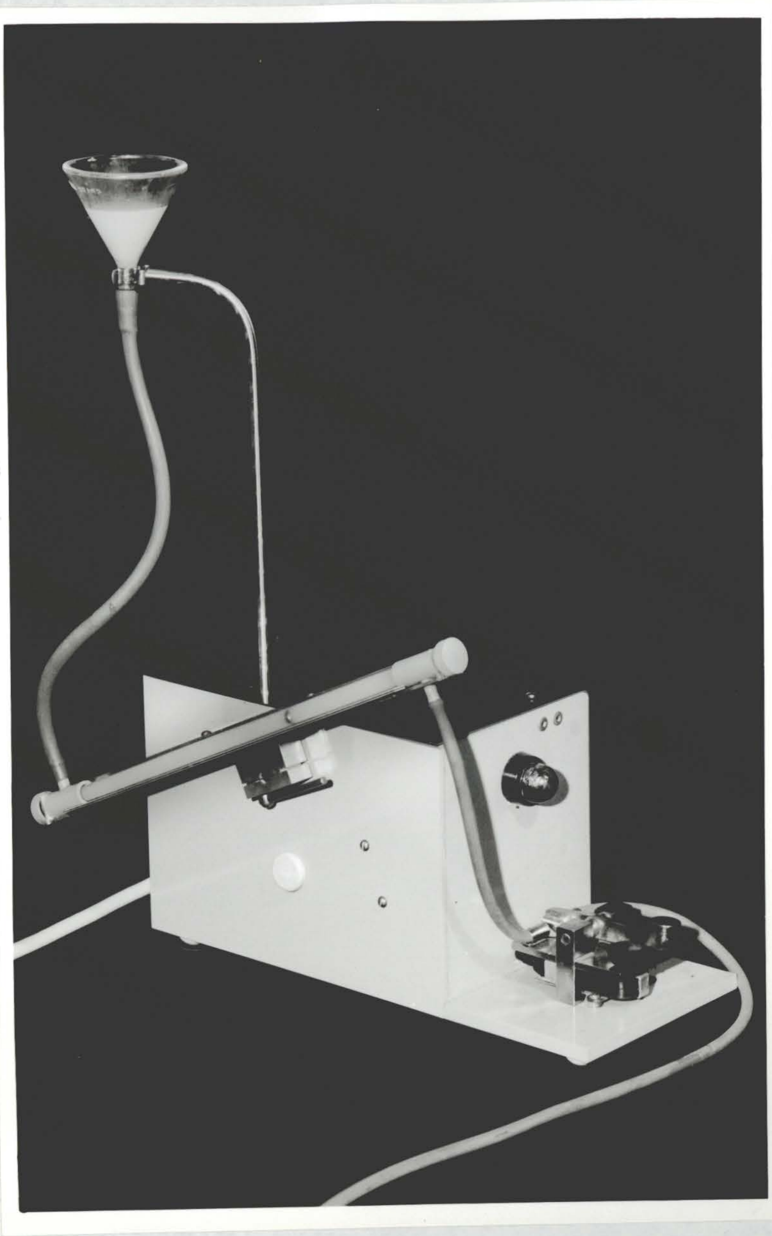

FIGURE 3

General view of the Ruakura rolling ball viscometer with the tube in the operating or tilted position.

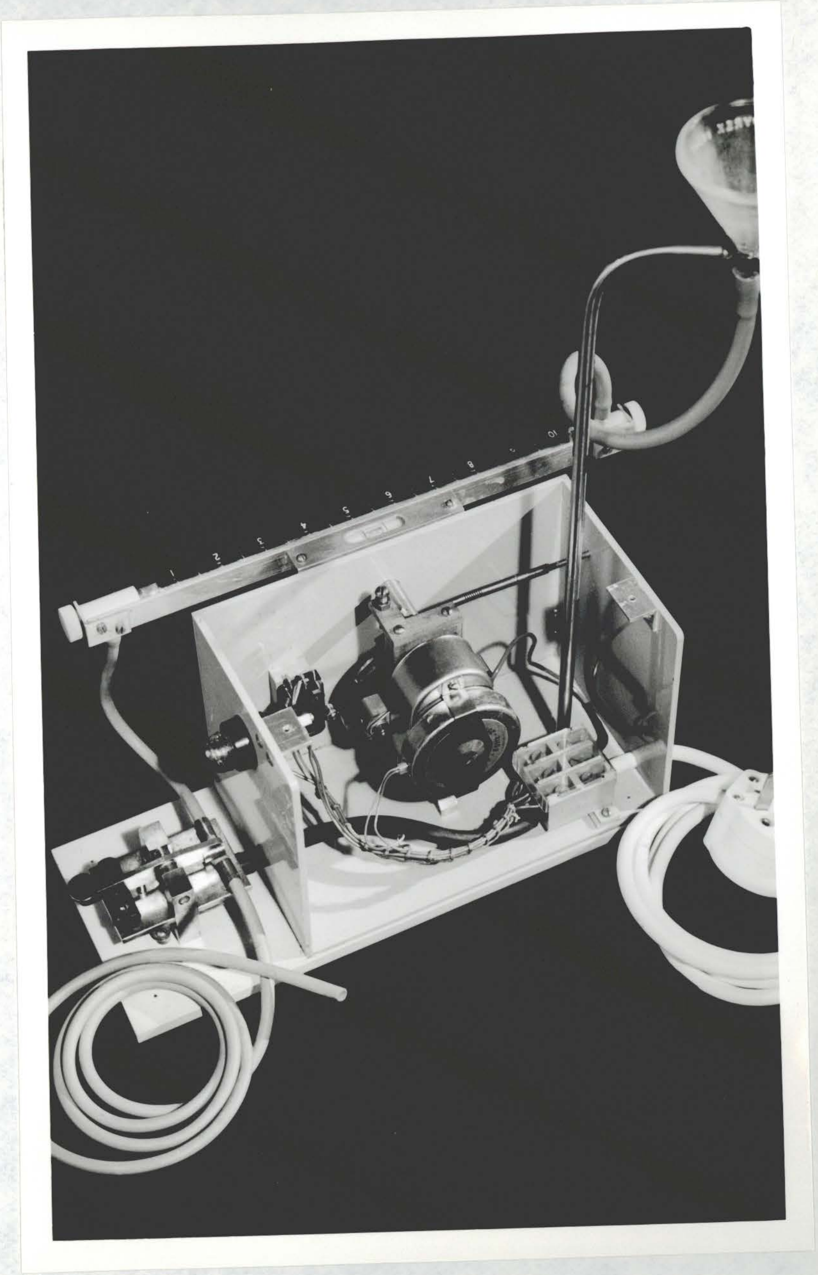

FIGURE 4a

A view of the Ruakura rolling ball viscometer with the case removed.

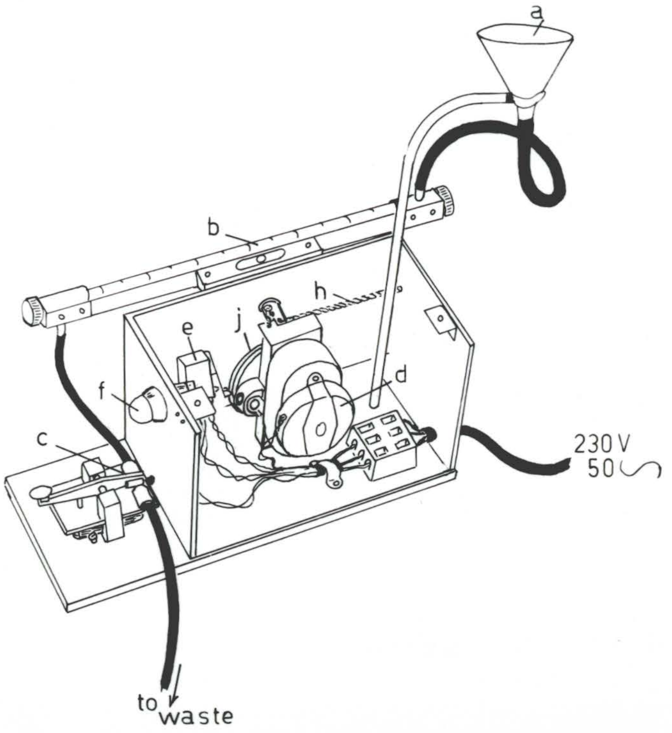

FIGURE 4b

Diagram of the Ruakura rolling ball viscometer with the case removed to show the components of the viscometer. The sample to be tested is poured into the funnel at (a). Opening the pinch valve (c) allows the liquid to flow into the viscometer tube (b), rolling the ball to zero and starting the motor (d) which controls the sequence of holding, tipping, returning to horizontal and finally stopping the motor through the action of the micro-switch (e).

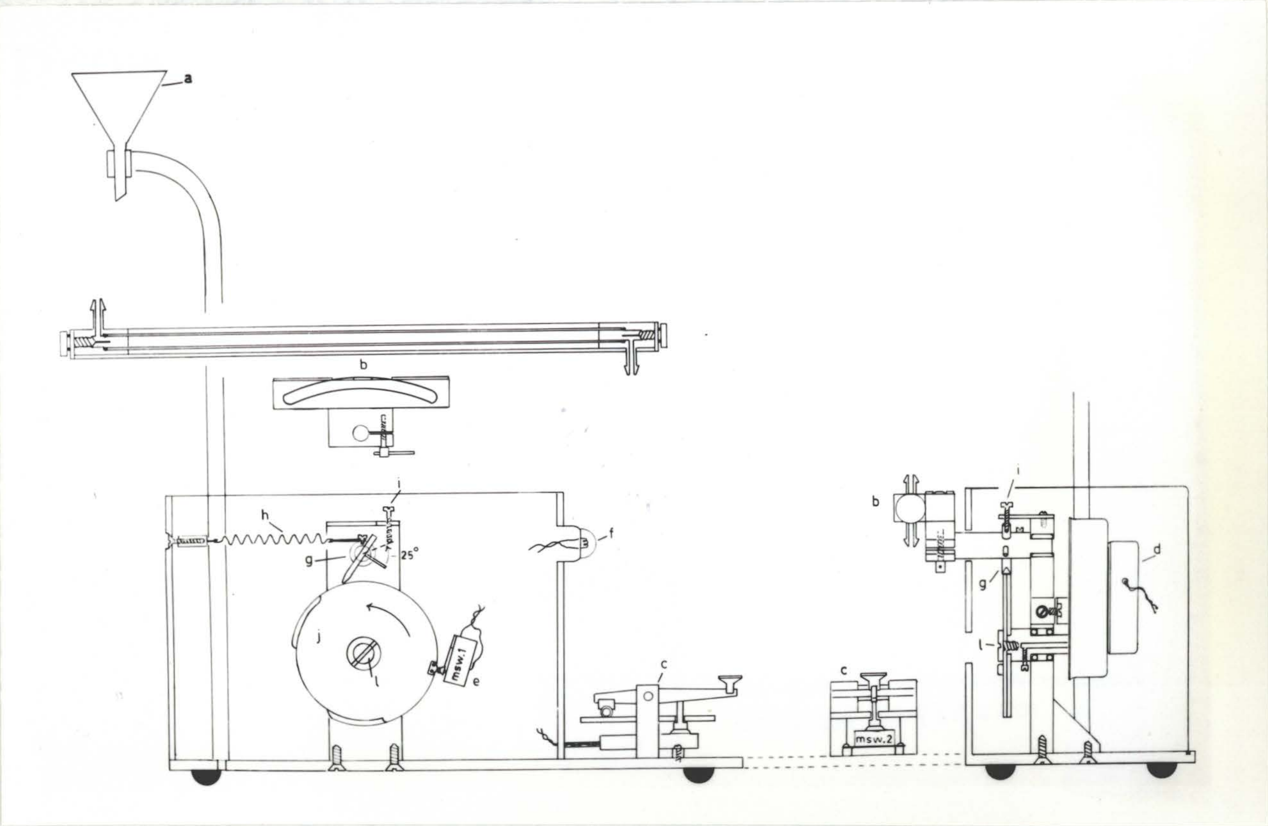

FIGURE 5.

Detailed view of the Ruakura rolling ball viscometer.

The inlet funnel (a) is connected by a rubber tube (not shown) to the inlet of the viscometer tube (b). Flow through the instrument is controlled by the pinch valve (c) which has a micro-switch mounted underneath connected in parallel with the cam operated micro-switch (e) for starting the motor (d), which when running causes the indicator lamp (f) to be lighted. The screw (i) sets the tipping angle while the tipping time is set by adjusting the relationship between the two components of the cam (j) and locking them with screw (l).

horizontal position by means of an adjustable clamp. Detail of the tube, holders and leveling system is shown in figure 6.

The pinch valve (c) controlling the flow of liquid through the instrument is mounted on a raised platform under which there is a spring operated micro-switch. A light pressure on the rubber "spring" opens the tube without starting the mechanism. In this position cleaning solutions can be flushed through the instrument between samples being tested. Heavier pressure against the rubber "spring" will both open the tube and close the microswitch which starts the motor. This component is shown in detail in figure 7.

In parallel with the pinch valve microswitch is the cam operated microswitch (e). Full depression of the pinch valve for a second or so starts the motor and causes the cam microswitch to close, permitting the motor to continue to run after the release of the pinch valve switch. The synchronous motor runs for a preset period of time (26 sec.) and then the cam follower (g) allows the tube to tilt to an angle of 25° for approximately 3.6 seconds. The tube is then returned to a horizontal position by the spring (h) and the position the ball has travelled to down the tube may be read at leisure.

The angle of tilt is set by the stop screw (i) and though there is an adjustment for the angle of tilt this is not the recommended method for calibration.

The time of tilting is determined by the relative position of the two components of the cam (j) which may be rotated independently and locked in the correct position by the locking screw (l) which is accessible through a hole in

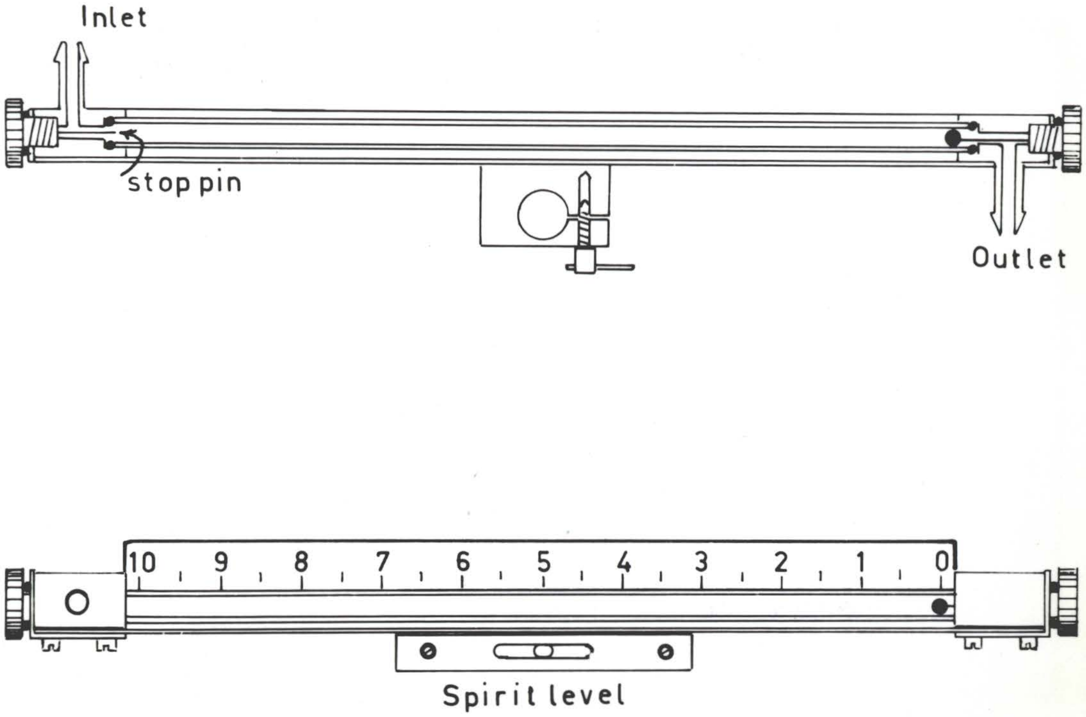

FIGURE 6

The viscometer tube is fitted in a carriage with a spirit level so that before viscosity determinations are made the tube can be brought to the horizontal position by means of an adjustable clamp.

The small stainless steel stop pins located in the holders at the ends of the tube are to prevent the stainless steel ball from blocking the inlet and outlet points.

The viscometer scale is shown.

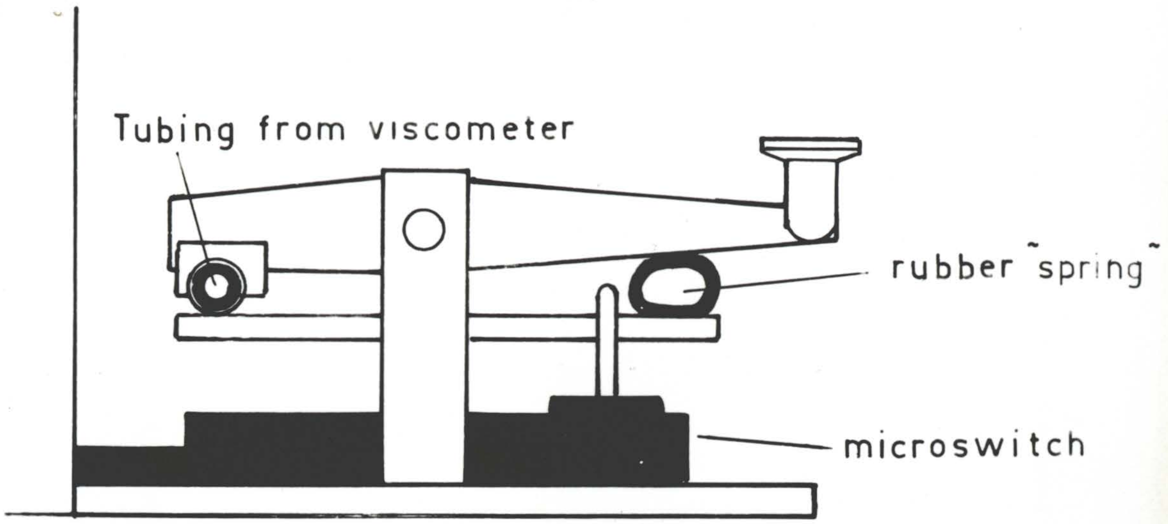

FIGURE 7

The pinch valve controlling the flow of liquid through the viscometer is mounted on a raised platform under which there is a spring operated microswitch. A light pressure against the rubber "spring" opens the tube without starting the motor. In this position cleaning solutions can be flushed through the viscometer. Heavier pressure against the rubber "spring" will both open the tube and close the microswitch which starts the motor.

the case. In practical operation of the Ruakura rolling ball viscometer alteration of the time of tipping is the component used for standardisation of the instrument.

STANDARDISATION OF THE RUAKURA ROLLING BALL VISCOMETER

A series of solutions were made from Glycerol AR (BDH Chemicals Ltd) and distilled water (w/w). The viscosity and density of these solutions can be obtained from standard tables (Sheely, 1932). (See Table 2). A standard series of glycerol solutions at the concentrations shown in Table 2 were made up. The viscosity of these solutions was measured with the Ruakura rolling ball viscometer at 25°C and also with some of the solutions at 20°C and 30°C. The results are presented in Table 3. There is a hyperbolic relationship when viscometer reading is plotted against viscosity (centipoise). This is shown in figure 8. A linear relationship is obtained when the inverse of viscometer reading is plotted against viscosity (figure 9) and is of the form:

$$\frac{10}{VR} = 2.87^{***}_{(\pm 0.06)}\,\eta + 0.12_{(\pm 0.15)}$$

where $\frac{10}{VR}$ = inverse viscometer reading x 10

η = viscosity (centipoise)

n = 38

The correlation coefficient of $\frac{1}{VR}$ with η is $r = 0.991$.

As the viscometer reading tends to become smaller than 1 small changes in viscometer reading reflect large changes in viscosity. In this region the relationship between the inverse of viscometer reading and viscosity is no longer linear. The curvilinear nature of this curve suggested by Stokes Law becomes apparent (see Appendix 1).

	VISCOSITY (centipoise)			DENSITY (gms/ml)
% GLYCEROL	20°C	25°C	30°C	25°C
5	1.143	1.010	0.900	1.01185
19	1.715	1.495	1.320	1.04590
28	2.324	2.008	1.752	1.06880
34	2.921	2.502	2.167	1.08455
39	3.593	3.052	2.624	1.09775
45	4.715	3.967	3.380	1.11380
50	6.050	5.041	4.247	1.12720
55	7.997	6.582	5.494	1.14090
59	10.25	8.312	6.870	1.15185
62	12.52	10.11	8.260	1.16010
68	19.40	15.33	12.33	1.17660
72	27.56	21.29	16.88	1.18755
76	40.19	30.56	23.60	1.19840
79	55.47	41.16	31.62	1.20655
81	69.3	51.02	38.56	1.21120
83	87.9	64.2	47.90	1.21720
85	112.9	81.5	60.05	1.22255
87	150.4	106.1	77.5	1.22790
88	174.5	122.6	88.8	1.23055
89	201.4	141.8	101.1	1.23320
90	234.6	163.6	115.3	1.23585

TABLE 2

GLYCEROL STANDARDS after Sheely (1932).

Standard glycerol solutions made up w/w with distilled water for standardising viscometer (from the data of Sheely, 1932)

	VISCOMETER READING*		
% GLYCEROL	$20^{o}C$	$25^{o}C$	$30^{o}C$
5	-	10.0	-
19	9.6	10.0	-
28	-	9.05	9.57
34	7.65	8.20	-
39	-	7.40	8.02
45	5.72	6.35	-
50	-	5.55	6.25
55	-	4.50	-
59	3.97	3.70	4.30
62	-	3.25	-
68	2.72	2.40	2.85
72	1.42	1.80	-
76	-	1.20	1.50
79	0.65	0.90	-
81	-	0.65	0.95
83	0.40	0.50	-
85	-	0.40	0.55
87	0.20	0.35	-
88	-	-	0.47
89	-	0.25	0.40
90	-	-	-

*Viscometer reading is mean of duplicates

TABLE 3

Results obtained with Ruakura rolling ball viscometer on testing with standard Glycerol solutions.

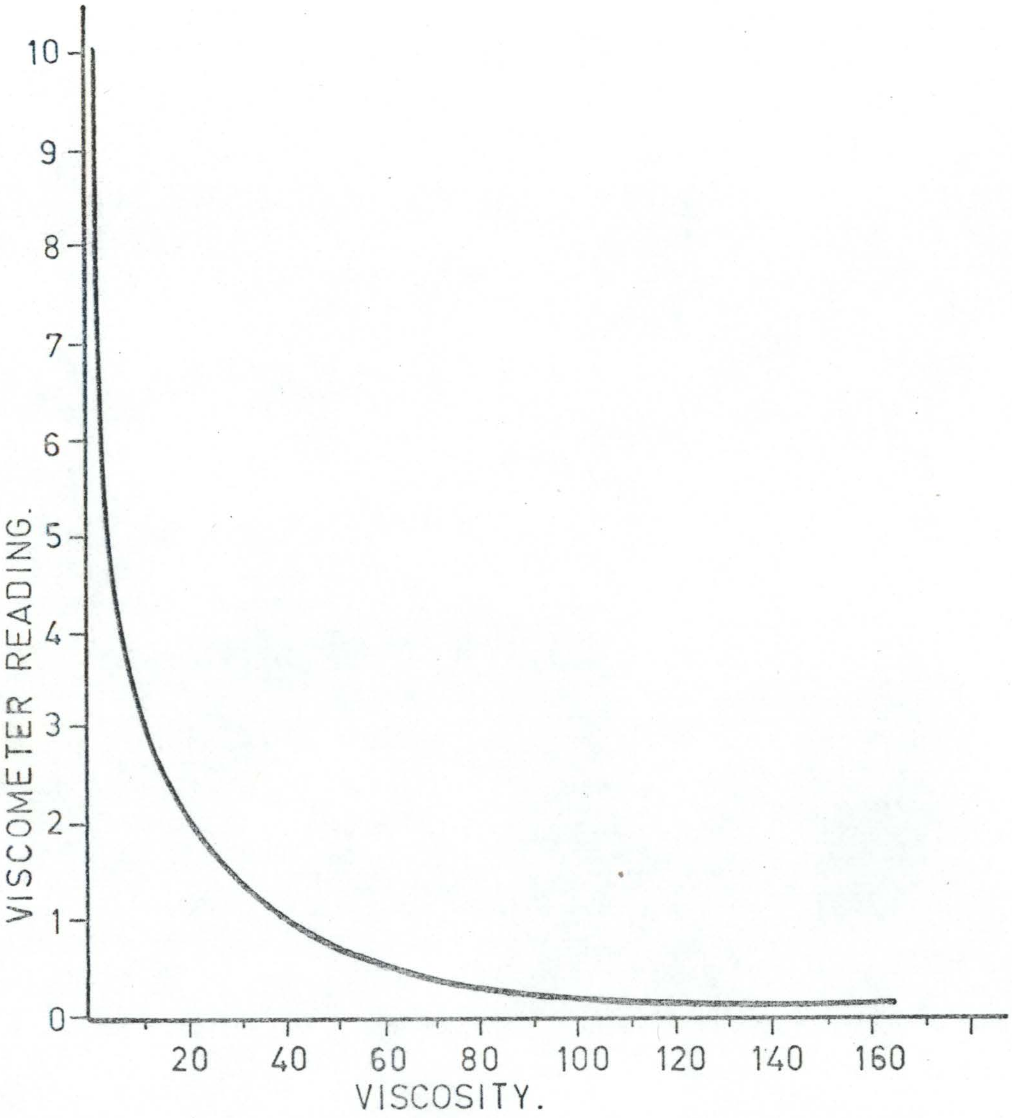

FIGURE 8

Relationship between viscosity (centipoise) and Ruakura rolling ball viscometer reading.

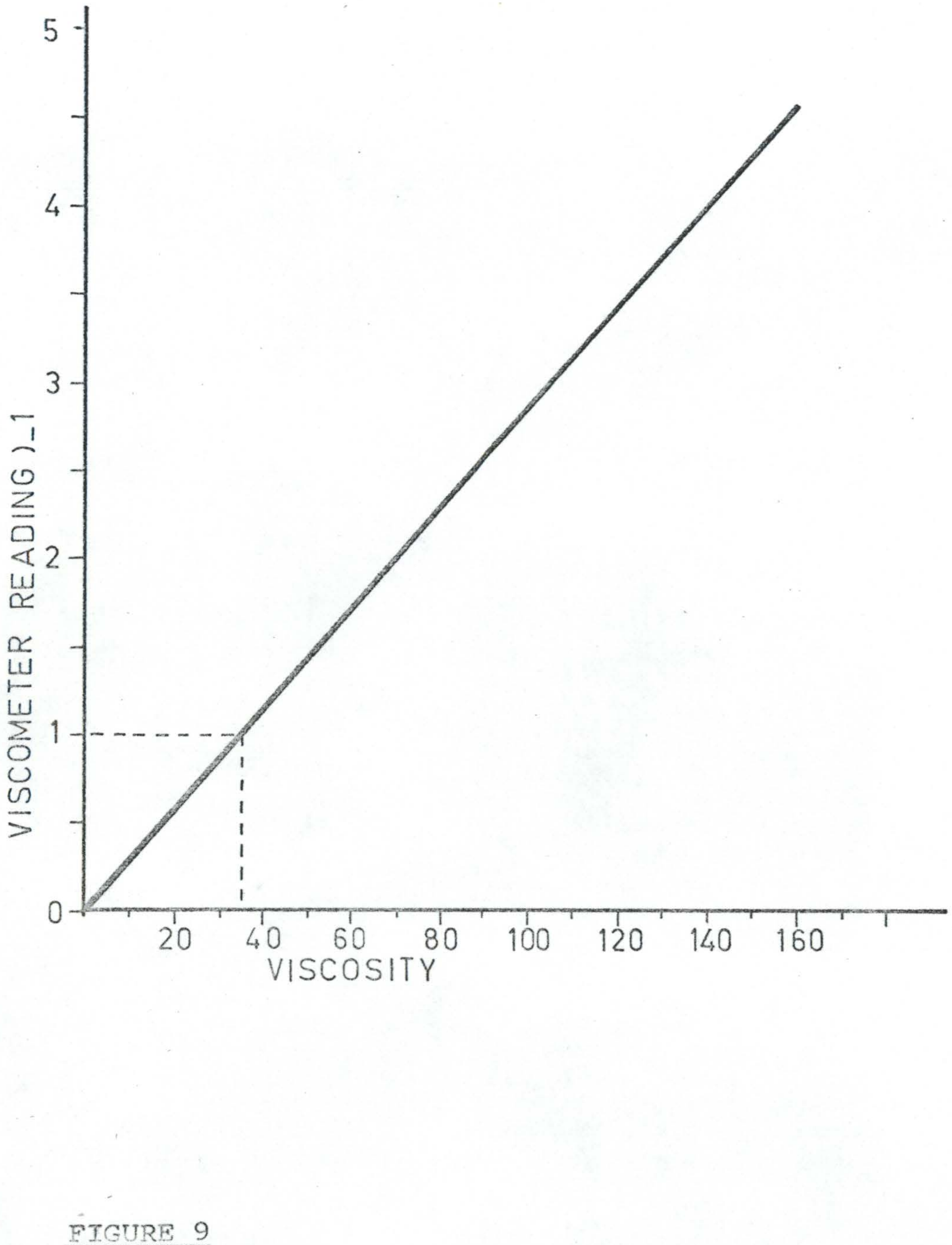

FIGURE 9

Relationship between inverse of Ruakura rolling ball viscometer reading ($\frac{1}{VR}$) and viscosity (η)

$$\frac{1}{VR} = 0.0287^{***}_{(\pm 0.0006)}\eta + 0.012$$

(The portion enclosed by dotted lines is shown in figure 10).

By reanalysing the regression within the limits 10 > VR > 1 a better fit is obtained (see figure 10).

$$\frac{10}{VR} = 2.43^{***}_{(\pm 0.03)} \eta + 0.61^{***}_{(\pm 0.00)}$$

where $n = 25$

$r = 0.998$

Rearranging $\eta = \frac{41.15}{VR} - 2.5$

This equation has been derived from consideration of experimental data (viscometer reading and viscosity only) and within the limits set the linear regression approximates the conditions of Stokes Law. According to Scott Blair and Oosthuizen (1960) this type of viscometer follows an equation derived by Flowers (1914).

$$F = A\eta v + B \rho_{liquid} v^2$$

This equation attempted to relate the force of resistance to the ball (F) to the velocity of the ball's travel (v).

where ρ_{liquid} = density of the liquid

η = viscosity (centipoise)

A = constant with dimensions (L)

B = constant with dimensions $(L)^2$

A curvilinear relation is implied between v and sin.θ where θ is the angle of tilt.

If the value of B is known the viscous resistance component ($A\eta v$) will be given by the total resistance minus the inertia term (Scott Blair, 1969).

$$A\eta v = {}^4/_3\, \pi\, r^3 (\rho_{ball} - \rho_{liq.})\, g \sin\theta - B\rho_{liq.} v^2$$

The constant B must have the dimensions of an area. Though analagous to Ossen's inertia correction for the freely falling sphere, it is unlikely to bear the same

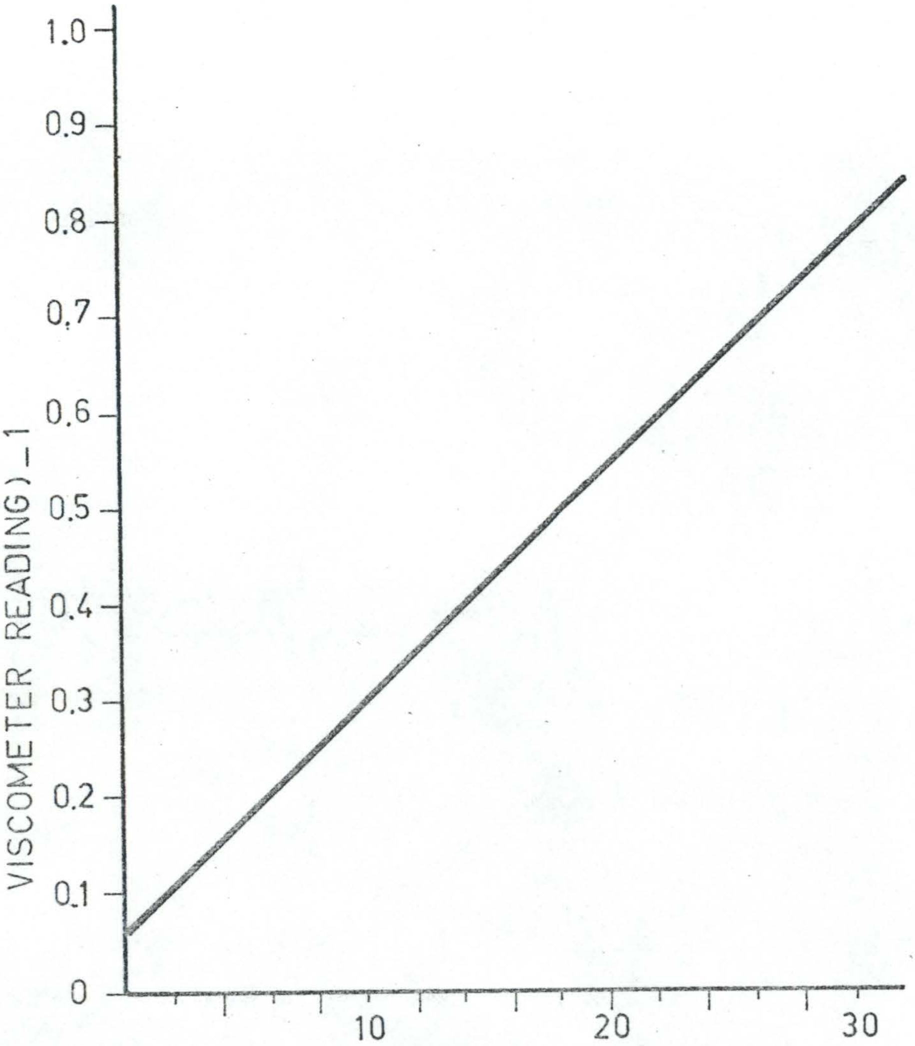

FIGURE 10

Relationship between inverse of Ruakura rolling ball viscometer reading between limits $10 > VR > 1$ and viscosity.

$$\frac{1}{VR} = 0.0243^{***}_{(\pm 0.0030)}\eta + 0.061$$

relation to the radius of the sphere. Scott Blair and Oosthuizen (1960) found at velocities in excess of 3cm/sec. B became greater than $\frac{1}{2}\pi r^2$. The calculation of the appropriate constants is controversial but a method of determining numerical values for A and B by least squares analysis from the data simultaneously is shown in Appendix 1. This analysis gave the equation

$$\eta = 5.55 \frac{(\rho_{ball} - \rho_{liq.})}{V.R.} - 0.24 \; \rho_{liq.} \quad V.R.$$

A graphical representation of this equation and the relationship obtained from linear regression of the data is shown in figure 11 and the values for these presented in Table 4.

The deviation between the two predictions arises due to centrifugal acceleration and the position of the ball from the fulcrum. When the Stokes' Law prediction is subtracted from the linear regression prediction the biggest positive deviations occur at the extreme ends of the scale (V.R. 1 and 10); decrease to a minimum at V.R. 2.4 and 7.4 and show their biggest negative deviation between V.R. 4.5 - 5.0.

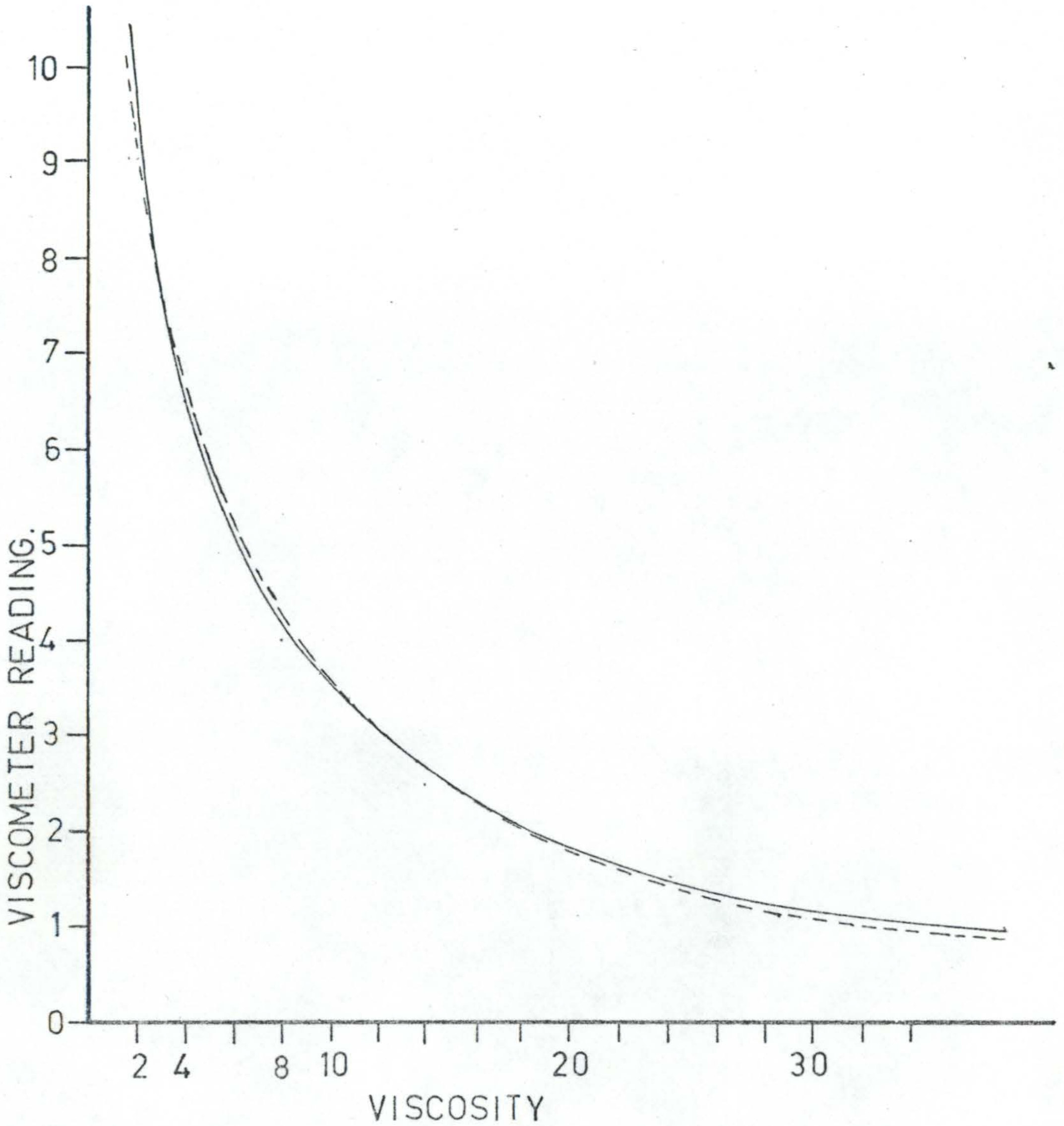

FIGURE 11

Comparison of derived relationships between Ruakura rolling ball viscometer reading and viscosity.

———————— derived from linear regression

- - - - - - - derived from Stokes' Law

VISCOMETER READING	VISCOSITY OF SOLUTION (Sheely, 1932)	PREDICTION FROM LINEAR REGRESSION	PREDICTION FROM STOKES' LAW
9.05	2.01	2.05	1.79
8.20	2.50	2.52	2.40
7.40	3.05	3.06	3.06
6.35	3.97	3.98	4.13
5.55	5.04	4.91	5.15
4.50	6.58	6.64	6.96
3.70	8.31	8.62	8.92
3.25	10.10	10.16	10.40
2.40	15.30	14.65	14.60
1.80	21.30	20.36	19.81
1.20	30.60	31.79	30.09

TABLE 4

Predictions of viscosity from derived equations.

DETECTION OF SOMATIC CELLS IN BULK MILK

MICROSCOPIC COUNTING METHODS

Stokes and Wegefarth (1897) were the first to devise a method of counting cells in milk. This method involved estimating the somatic cells in a sample of milk sediment after centrifugation.

Because of the errors involved in centrifuging Prescott and Breed (1910) introduced a direct method which gained general acceptance and has been used with minor modifications ever since. The method consists of withdrawing 0.01 ml of fresh milk and spreading it over an area of one square centimetre on a glass slide. The film is dried, fixed, defatted, stained and the cells in a number of fields counted under an oil immersion lens. This number is converted to an estimate of the total count of the original milk sample by multiplying it by a constant derived from the area covered by the microscope field with the particular lens system in use. Astermark (1969a) has reviewed this technique.

The Sub-committee on Screening Tests, National Mastitis Council, have developed the Direct Microscopic Somatic Cell Count (DMSCC). This method uses a system of counting dependent on an estimation of the number of cells present in the milk sample (Brazis 1968; Schultze, 1968; 1970, 1971a,b; Schultze and Smith, 1969; Smith, 1969; Ward and Postle, 1970; Schultze et al. 1971).

The modification of the DMSCC used in this study is described in Appendix 2.

CHEMICAL ESTIMATION OF SOMATIC CELLS

In milk not heavily contaminated with bacteria the only component containing DNA will be the somatic cells. Several tests to estimate the DNA content of milk samples have been proposed.

The Feulgen-DNA reaction gives a purple colouration, the intensity of which increases with the number of somatic cells in the milk sample. Schiff's reagent based on Fuchsin in bisulphite solution is a well known stain for DNA. Paape *et al*. (1964) based the Feulgen-DNA test on this reagent. They found the coefficient of variation was 7%. Hauke and Lutting (1966) report the Feulgen-DNA test to have advantages over direct microscope examinations as
(i) less time is required
(ii) the range of error is reduced
(iii) results are not affected by the degree of freshness of the milk.

Widstrom (1928) has shown the maximum sensitivity of this reagent corresponds to 500 micrograms of DNA per ml. Davidson *et al*. (1951) reported an average of 7 micrograms of DNA per million leucocytes. This would make the Feulgen-DNA method too insensitive for the detection of any change in the DNA level of milk brought about by contamination with leucocytes. The colour appears to be due to some other constituent of abnormal milk.

A method for determining DNA using indole in hydrochloric acid as developed by Ceriotti (1952) has adequate sensitivity for the determination of DNA in leucocytes of milk (Whittlestone and de Langen, 1965). The method used in this study is that of de Langen (1967) and is described in Appendix 3.

Hutjens et al. (1970) have described another method for estimation of DNA in milk using membrane filter separation and determination of DNA concentration with diphenylamine. This filter DNA method has been modified to use indole and hydrochloric acid determination of DNA concentration (Ward and Schultz, 1971).

The estimation of DNA content of a milk sample is a good direct method of estimating the cell content provided that bacterial contamination is not excessive. The DNA content of the nucleus in one species is a constant characteristic of the number of chromosomes. Diet, the role of hormones, age, sex, strain and body weight have no noticeable influence upon the amount of DNA per nucleus (Vendrely, 1955).

INDIRECT ESTIMATIONS OF SOMATIC CELLS

Several indirect tests to estimate the somatic cell content of cows' milk have been proposed. These tests have been reviewed by Milne (in press).

The Whiteside Test (Whiteside, 1939) detects abnormal milk by the formation of a viscid mass when 2 ml of normal sodium hydroxide is added to 10 ml of milk and vigorously stirred. Murphy and Hansen (1941) modified the test by using 1 drop of normal sodium hydroxide to 5 drops of cold milk on a glass plate and stirring vigorously for about 20 seconds. A positive test was recorded if the milk separated into particulate matter and whey or if a viscid mass formed which failed to separate. Schalm and Gray (1954) and Schalm et al. (1955) showed good correlations between somatic cells and the intensity of the Whiteside reaction.

The test most widely accepted is the California Mastitis Test (CMT) first described by Schalm and Noorlander (1957) who found that when certain surface active agents were added to milk there was an increase in viscosity dependent upon the number of somatic cells present. The method and the application of the CMT test to individual cow samples to be tested at the cow-side are described in Appendix 3. This test is scored by a subjective method based on a visual judgment of the viscosity development by the reaction mixture.

Thörne (1962) attempted to make this measurement objective by using a mechanical mixing device with projecting arms. These dipped in and out of the milk reagent mixture to form strings of gel on the tip which may be more easily detected. This technique helped to reduce operator errors.

The viscosity of the milk-reagent mixture can be used as an objective measure. Most viscometric techniques have measured flow rate through a capillary tube or a small orifice. The Brabant Mastitis Reaction uses the flow through a capillary in a fixed time as a measure of the viscosity (Jaartsveld 1961, 1962a,b; Matschullat, 1963; Seeleman, 1964; Post&Jaartsveld, 1966) and the Wisconsin Mastitis Test similarly measures the flow through a small orifice (Postle, 1964; Thompson and Postle, 1964; Postle and Smith, 1965). Both techniques suffer from the disadvantage that small clots can block the orifice and give a reading corresponding to an erroneously high viscosity. The fact that liquid height in the tube has a complex effect on the flow rate through the orifice (or capillary); and this is used as the index of cell content, results in a non-linear relationship not particularly well suited to the estimation of cell levels in bulk milk in which cell numbers are low.

Other types of viscometer have been used to determine the viscosity of the CMT gel. These include falling ball viscometers, Hoppler viscometers, rolling ball viscometers, Ferranti viscometers and Fischer electroviscometers.

USE OF THE RUAKURA ROLLING BALL VISCOMETER TO MEASURE THE VISCOSITY OF THE CMT REACTION.

The CMT gel is rheomalaxic in nature and any instrument used to measure the viscosity of the CMT gel must not apply excessive shear forces during the measurement. Any shear force must be small and only applied once in the course of a measurement.

MATERIALS

Reagent: Teepol (Shell Chemicals, "Teepol 610"); 2% v/v solution in water.

METHOD

1. A 5ml milk sample was measured into a small glass vessel (McCartney bottle) using a syringe (figure 13).
2. Reagent (10 ml) was added from a tilt measure without causing excessive turbulence (figure 14).
3. Without any agitation or delay the mixture was poured gently into the viscometer funnel (figure 15).
4. The pinch valve is depressed fully, allowing the mixture to flow into the instrument and displace the ball to the zero end of the scale. Depression of the pinch valve starts the timing sequence. The 26 second holding time allows completion of the reaction.

5. The viscometer tube tips through an angle of 25° from horizontal for the preset time (figure 16) and is then returned to the horizontal position.

6. The distance the ball has travelled is read from the scale.

7. The pinch valve was depressed half way to allow the mixture to drain without starting the timing mechanism. Before commencing the next determination the viscometer was flushed out with clean water.

This method of operation is shown schematically in figure 12.

The viscometer was standardised daily against a glycerol solution of known viscosity. It is important that the rubberware is checked frequently to see that it does not interfere with the angle of tilt.

SAMPLE TREATMENT

The milk samples used in this study are a series of herd bulk milks collected at a Milk Treatment Station. The samples were refrigerated Town Milk samples held at 7°C and collected once daily from the farms between 7 am and 11 am. An aliquot (approximately 100 ml) was taken for tests conducted in this study. This aliquot was drawn from the sample brought to the Milk Treatment Station for routine bacteriological, gravimetric and other required milk quality tests conducted by that laboratory. They were collected as soon as practicable after delivery and equilibrated to room temperature before viscometric measurements were made.

RESULTS

Table 5 sets out a typical set of results in which the distance the ball has rolled (Viscometer Reading) and

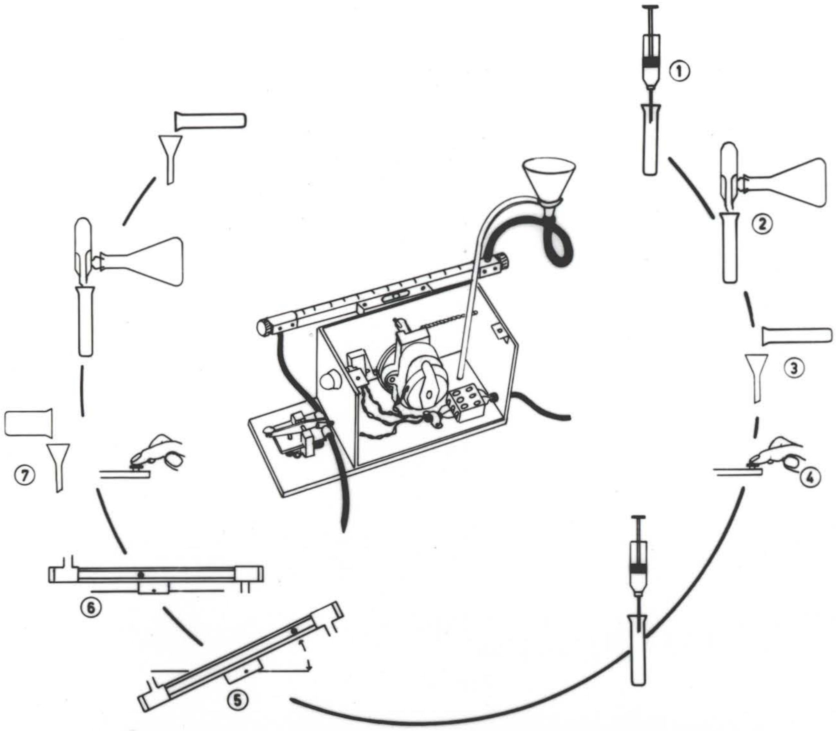

FIGURE 12

Schematic representation of method of operating the Ruakura rolling ball viscometer. Numbers correspond to the steps in the text. A throughput of 60 samples/hour can be attained.

FIGURE 13

The milk samples to be tested were measured into individual McCartney bottles with a syringe.

FIGURE 14

The CMT reagent is added to the milk sample from a tilt measure. Care must be taken to ensure that the method of adding the reagent does not cause excessive turbulence as this can exert an influence on the apparent viscosity measured.

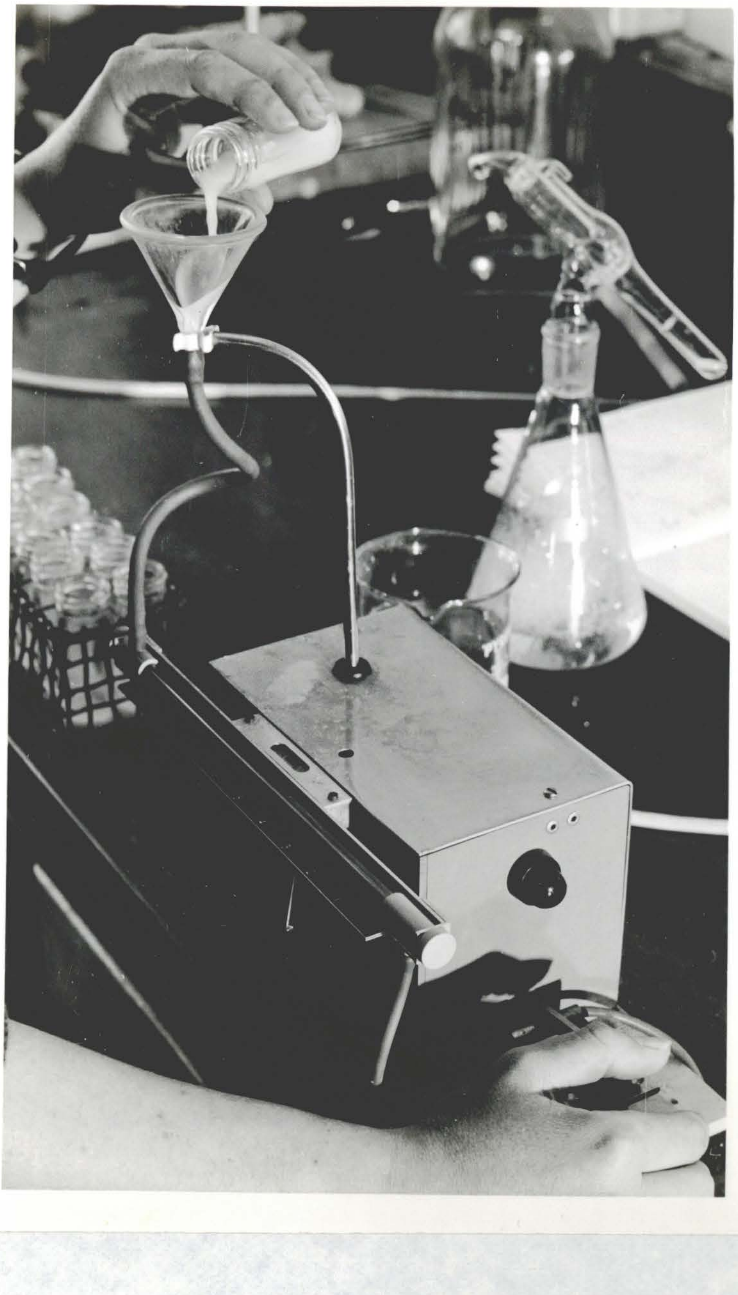

FIGURE 15

The milk-reagent mixture is poured into the viscometer funnel. Opening the pinch valve (operator's right hand) allows the mixture to flow into the viscometer tube.

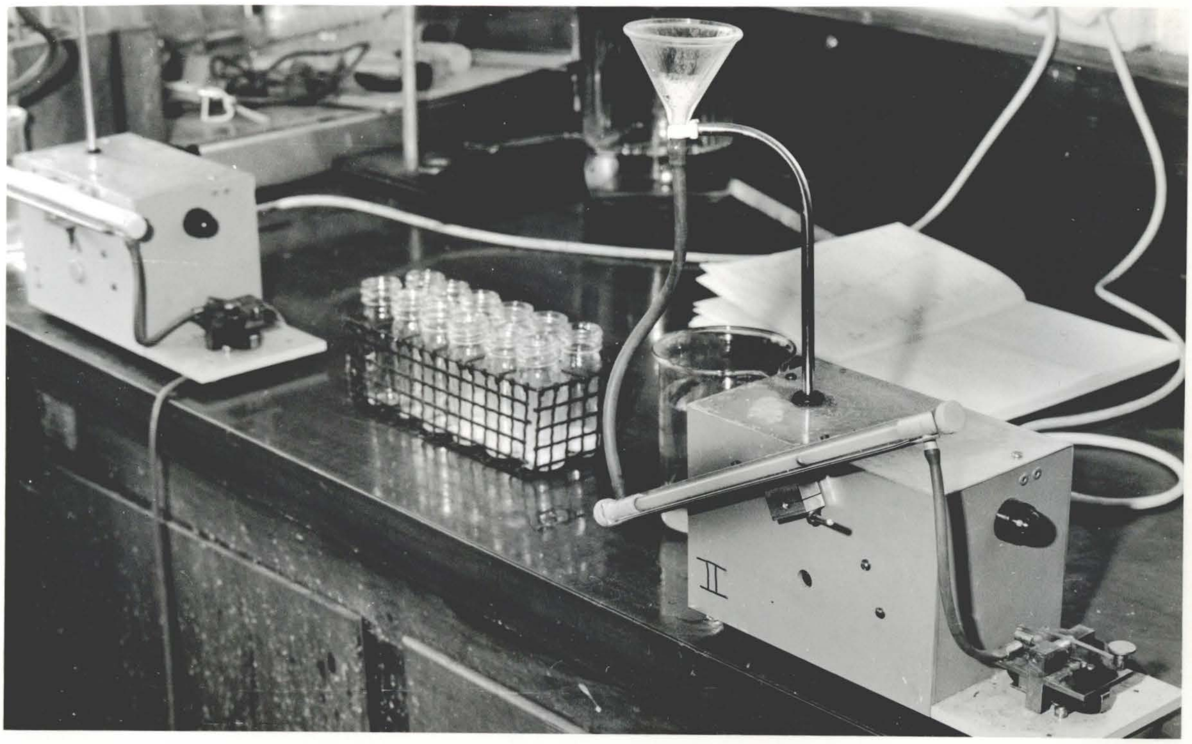

FIGURE 16

After a holding time of 26 seconds the viscometer tube tips through an angle of 25° from the horizontal allowing the ball to roll through the mixture. After 3.6 seconds (approx.) the tube returns to the horizontal position and the distance the ball has rolled can be read at leisure.

VISCOMETER READING	INVERSE OF VISCOMETER READING	DMSCC (cells/ml)
2.70	0.3704	1 500 000
2.80	0.3571	1 440 000
3.00	0.3333	1 296 000
3.10	0.3226	1 107 000
3.10	0.3226	1 088 000
3.80	0.2632	1 074 000
4.30	0.2326	834 000
5.10	0.1961	902 000
5.40	0.1852	852 000
6.30	0.1587	732 000
6.70	0.1493	711 000
7.30	0.1370	791 000
7.30	0.1370	608 000
7.40	0.1351	786 000
7.50	0.1333	684 000
7.60	0.1316	672 000
8.50	0.1176	564 000
8.50	0.1176	470 000
8.80	0.1136	490 000
8.90	0.1124	528 000
9.00	0.1111	536 000
9.40	0.1064	413 000

$$\text{V.R./DMSCC } r = -0.94$$

$$\frac{1}{\text{V.R.}}\text{/DMSCC } r = 0.96$$

TABLE 5

Relationships between Viscometer Reading and Direct Microscopic Count (DMSCC) the inverse of Viscometer Reading have been related to the cell content (DMSCC) of the milk sample. The variance includes standing times in the farm vat, temperature, and stage of lactation but does not include day-to-day variation in testing temperature or variation due to different operators.

Figure 17 shows the results determined over a three months period obtained with the Ruakura rolling ball viscometer compared with DMSCC. The fitted regression equation of Viscometer Reading with DMSCC is of the form:

$$\mathrm{VR} = 9.90 - 0.741^{***}_{(\pm 0.045)}\ \mathrm{DMSCC} \quad ; \quad \mathrm{RSD}\ 1.09$$

The standard error of this estimate is improved if the inverse of Viscometer Reading is compared with DMSCC.

$$\frac{1}{\mathrm{VR}} = 0.0363^{***}_{(\pm 0.0016)}\ \mathrm{DMSCC} - 0.0020; \quad \mathrm{RSD}\ 0.0388$$

DISCUSSION

Table 5 indicates the level of accuracy which can be expected in estimating the somatic cell content of a herd milk sample. These results were obtained by an experienced operator on a within-day basis. The DMSCC has limitations in its use as a reference standard as the coefficient of variation can fall between wide limits (Appendix 1). The range of the Ruakura rolling ball viscometer is ideally suited to indirectly estimating the somatic cell content of a herd milk sample from the viscosity developed in the CMT reaction.

The results shown in figure 17 include the variance due to daily variations in testing temperature (ambient temperature). They therefore indicate the accuracy which

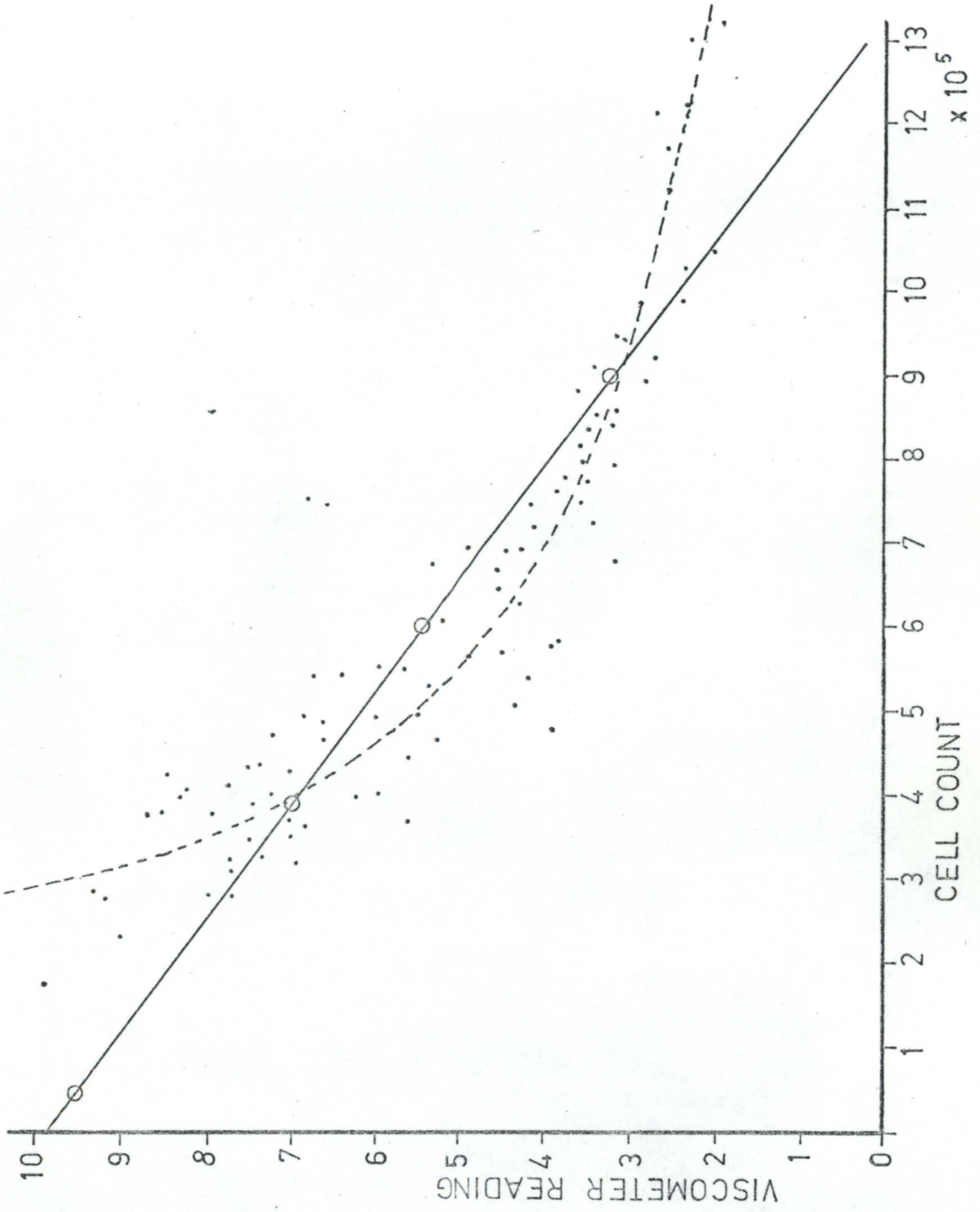

FIGURE 17

The regression equation of Viscometer Reading (VR) with cell count (DMSCC) is:

$$VR = 9.90 - \underset{(\pm\ 0.045)}{0.741^{***}}\ DMSCC\ ;\ RSD\ 1.09$$

The curvilinear relationship has been obtained from the regression:

$$\frac{1}{VR} = \underset{(\pm\ 0.0016)}{0.0363^{***}}\ DMSCC - 0.0020\ ;\ RSD\ 0.0388$$

The data was collected over a three month period and indicates the accuracy which can be expected under practical conditions.

can be expected under practical conditions. There is a highly significant relationship between the inverse of Viscometer Reading and DMSCC.

Carré (1970) found it was not possible to establish a simple correlation between viscosity and leucocyte count in mastitic milk. The viscosity of the CMT gel was measured with a Höppler viscometer in this study. The shear forces in this type of instrument are greater than in the Ruakura rolling ball viscometer as the angle of inclination is close to the vertical. Carré used a destructive method to measure the viscosity. The ball was allowed to fall through the milk-reagent mixture to verify that no air bubbles impeded the rate of fall. The viscometer tube was then inverted and the time of fall measured on the ball's second journey through the gel. It is doubtful if Carré's method measures the true viscosity of the mixture because of the delicate structure of the CMT gel and its rheomalaxic behaviour.

TIME COURSE OF THE VISCOMETRIC REACTION

In the description of the CMT reaction (American Public Health Association; 1967) a milk sample with up to 5 million cells/ml is defined as only having "some suggestions of gel formation". In less viscous classes of reaction (i.e. the type of reaction expected from herd milk samples) it was noted that this slight gel formation disappeared with continued swirling. Carré (1970) qualified the use of the Brabant Mastitis Reaction and the CMT in suggesting that the results should be read promptly since a positive reaction is only temporarily exhibited.

The Ruakura rolling ball viscometer can detect small changes in gel viscosity and has been used to detect decreases in the gel viscosity at various times after the addition of the reagent.

RESULTS

Ten samples of herd milk in individual containers has reagent added at time t = 0. Ten determinations of the viscosity developed were sequentially assessed. The results are shown in Table 6 and in portion 2 of figure 18.

When the holding time was shorter than the 26 second holding time set by the instrument the results obtained show a high degree of variability. This is demonstrated in portion 1 of figure 18.

DISCUSSION

Carré (1970) verified that the time course of the reaction has an effect on the value obtained from viscosity measurements. The curve plotted for viscosity versus time was a hyperbola. Determination of the viscosity of the gel prior to 20 seconds after the addition of the reagent was in poor agreement with the somatic cell content. (Carré, 1970). The Ruakura rolling ball viscometer makes all determinations after a constant holding time of 26 seconds.

As the viscosity of the gel decreases with time all determinations should be made at a constant time after addition of the reagent. The holding time of the Ruakura rolling ball viscometer satisfies this criterion and that of Carré (1970) in that measurements of the viscosity should not be made until 20 seconds after reagent addition to the milk. The curvilinear nature of the viscosity decrease is verified.

TIME (secs)	VISCOMETER READING (1)	PERCENTAGE INCREASE (2)
26 (3)	4.10	-
56	4.60	12.2
86	4.85	18.3
116	4.95	20.7
146	5.25	28.0
176	5.45	32.9
206	5.60	36.6
236	5.85	42.7
266	5.90	43.9
296	5.95	45.1

TABLE 6

Viscosity of CMT gel as determined by the Ruakura rolling ball viscometer at various times after the addition of the reagent.

(1) Viscometer reading is the average value obtained from 10 samples.

(2) Percentage increase in viscometer reading is calculated using t = 26 as the base.

$$\text{i.e. } \frac{\text{difference in readings}}{4.10} \times 100$$

N.B. Because of the inverse relationship between Viscometer Reading and viscosity the percentage increase in Viscometer Reading is a function of the decrease in viscosity.

(3) The holding time of the viscometer is 26 seconds and samples were tested sequentially at 30 second intervals to give a determination time of $(N \times 30) + 26$.

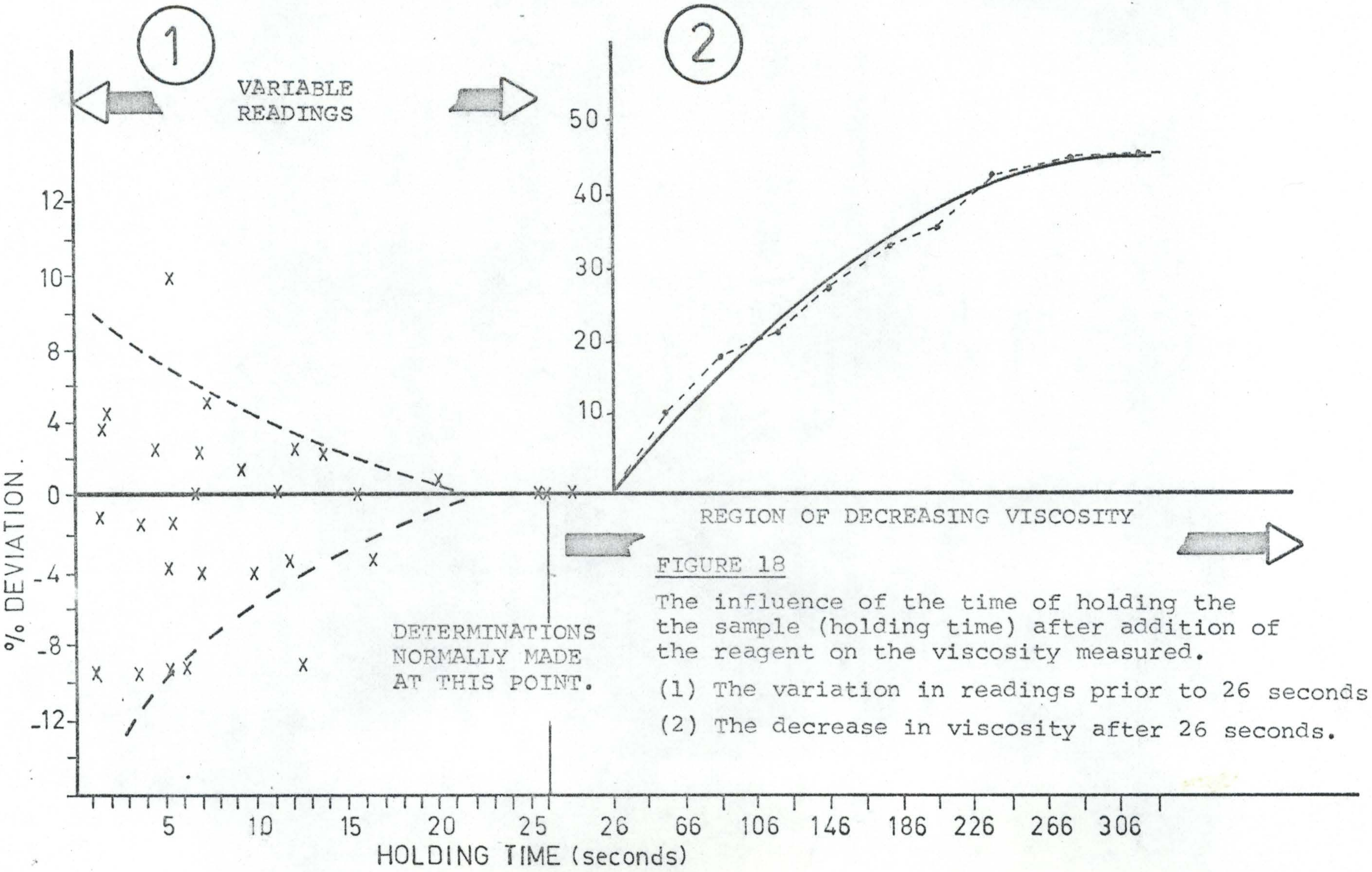

FIGURE 18

The influence of the time of holding the the sample (holding time) after addition of the reagent on the viscosity measured.

(1) The variation in readings prior to 26 seconds

(2) The decrease in viscosity after 26 seconds.

NATURE OF THE REACTION OF SOMATIC CELLS WITH A SECONDARY ALKYL SULPHATE

THE ROLE OF DNA IN THE REACTION

The mechanism of the CMT reaction has not yet been clearly demonstrated. Jensen (1957) reported the reaction to be a leucocyte-protein gel precipitate more specific in reaction than the Whiteside test. Obiger (1961) stated the CMT reaction could be considered as a combination between the test reagent and certain milk proteins. The reaction entailed a certain electrochemical potential in the proteins. Christ (1962) contended that proteins reacted with the detergent, becoming either precipitated, denatured or bound into a protein-detergent complex. Dedié and Kielwein (1960) maintained that probably other proteins together with cell proteins react with the test solution. Nageswararao and Derbyshire (1969) found soluble casein increased the viscosity of the gel formed by leucocytes with the CMT reagent.

Jaartsveld (1961) reported that DNA in the cell nucleus was responsible for the viscous reaction. Carroll and Schalm (1962) found that nucleated cells produced a typical CMT reaction when added to normal milk whereas non-nucleated cells did not. These workers also reported that the formation of the gel in the CMT reaction was prevented by deoxyribonuclease I, but not with treatment by ribonuclease and trypsin. The action of deoxyribonuclease I has been verified by Richter *et al*. (1968) and Nageswararao and Derbyshire (1969). The latter workers also reported crude protease, trypsin, papain and bacterial protease decreased the gel forming properties to different degrees.

It has been demonstrated (Dounce and Monty, 1955) that a small amount of deoxyribonuclease I can cleave much of the DNA from the residual portion in gelable nuclei without causing extensive depolymerization of the DNA but destroying the gel forming power of the nuclei. Bernstein (1956) believed the structure of DNA-protein gels to be determined by intermolecular association bonds in which proteins were the primary participants. Scruggs and Ross (1964) showed that the viscosity of DNA gels is affected by the presence of proteins and univalent and divalent cations. Nageswararao and Derbyshire (1969) showed that the viscosity of the CMT gel is decreased by the addition of $CaCl_2$ and NaCl.

Robins (1964) found that shear forces cause DNA solutions to decrease in viscosity irreversibly. At higher concentrations DNA is self protective with respect to shear - greater shear forces could be applied without apparent anomalies in viscosity measurements. Robins suggested this phenomenon is probably a critical one and his results suggested that a delicate structure was probably being broken down, rather than the DNA molecules themselves being sheared. DNA solutions exhibit non-newtonian behaviour (Robins, 1964).

Carré (1970), working on the viscosity of mastitic milks using the CMT reaction, measured viscosity after liberating the leucocyte DNA with 3% sodium lauryl sulphate. He showed a direct relationship between DNA concentration and viscosity in a model system using levels of DNA in excess of 100 times that found in herd bulk milk. In cows' milk he found it was not possible to establish a simple correlation between viscosity and leucocyte count and concluded that other characteristics of milk were involved in the reaction.

RESULTS

There is a linear relationship between DNA and DMSCC. i.e.

$$\text{DNA} = 0.566^{***}_{(\pm\ 0.030)}\ \text{DMSCC} + 1.42;\ \text{RSD}\ 0.733 \quad \text{(Appendix 3)}$$

Hence similar relationships will exist between VR, inverse of VR and DNA as exist between VR, its inverse and DMSCC.

$$\text{VR} = 10.96 - 1.15^{***}_{(\pm\ 0.07)}\text{DNA}\ ;\quad \text{RSD}\ 1.12$$

and $\frac{1}{\text{VR}} = 0.055^{***}_{(\pm\ 0.003)}\ \text{DNA} - 0.047\ ;\quad \text{RSD} = 0.045$

These relationships are shown in figure 19.

The data obtained with standard solutions of glycerol can be used to convert this reading to an estimate of (centipoise).

It was found that the regression of best fit (i.e. lowest standard error of the estimate) of DNA on η is

$$\eta = 0.223^{***}_{(0.010)}\ (\text{DNA})^2 + 0.763\ ;\ \text{RSD}\ 1.63$$

This relationship can be seen in figure 20 with a portion of the relationship between η and glycerol concentration superimposed upon it.

The correlation coefficients for the data considered here are:

DNA/DMSCC	$r = 0.89$
VR/DNA	$r = 0.85$
$\frac{1}{\text{VR}}$ /DNA	$r = 0.89$
η /(DNA)^2	$r = 0.91$

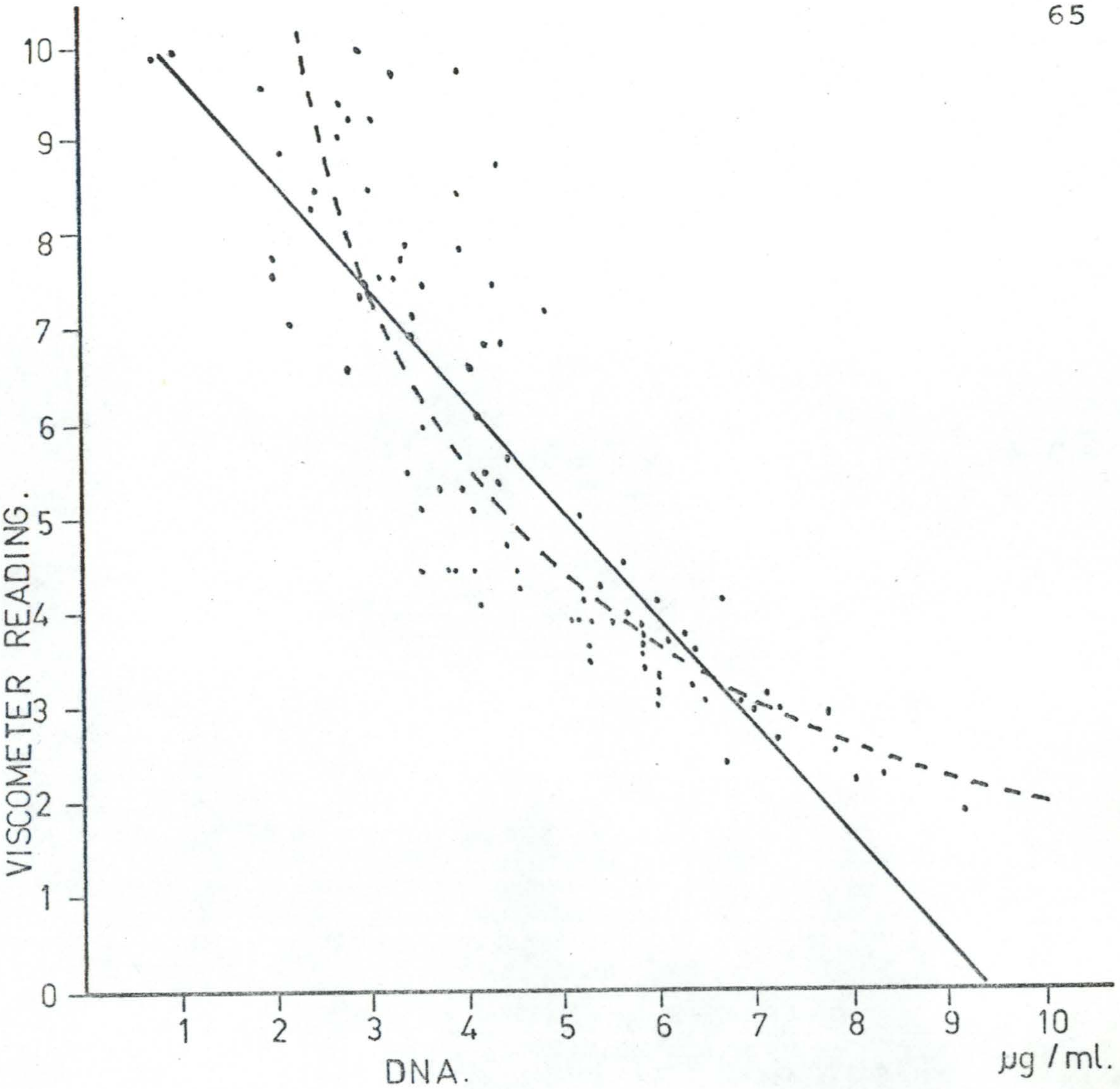

FIGURE 19

Relationship between Ruakura rolling ball viscometer reading (VR) and DNA content (g/ml) in herd milk samples. The straight line is obtained from:

$$VR = 10.96 - 1.15^{***}_{(\pm\ 0.07)}\ DNA\ ;\ RSD\ 1.12$$

and the curvilinear relationship from:

$$\frac{1}{VR} = 0.055^{***}_{(\pm\ 0.003)}\ DNA - 0.047\ ;\ RSD\ 0.045$$

This data was collected over a three months period and is shown in Appendix 8.

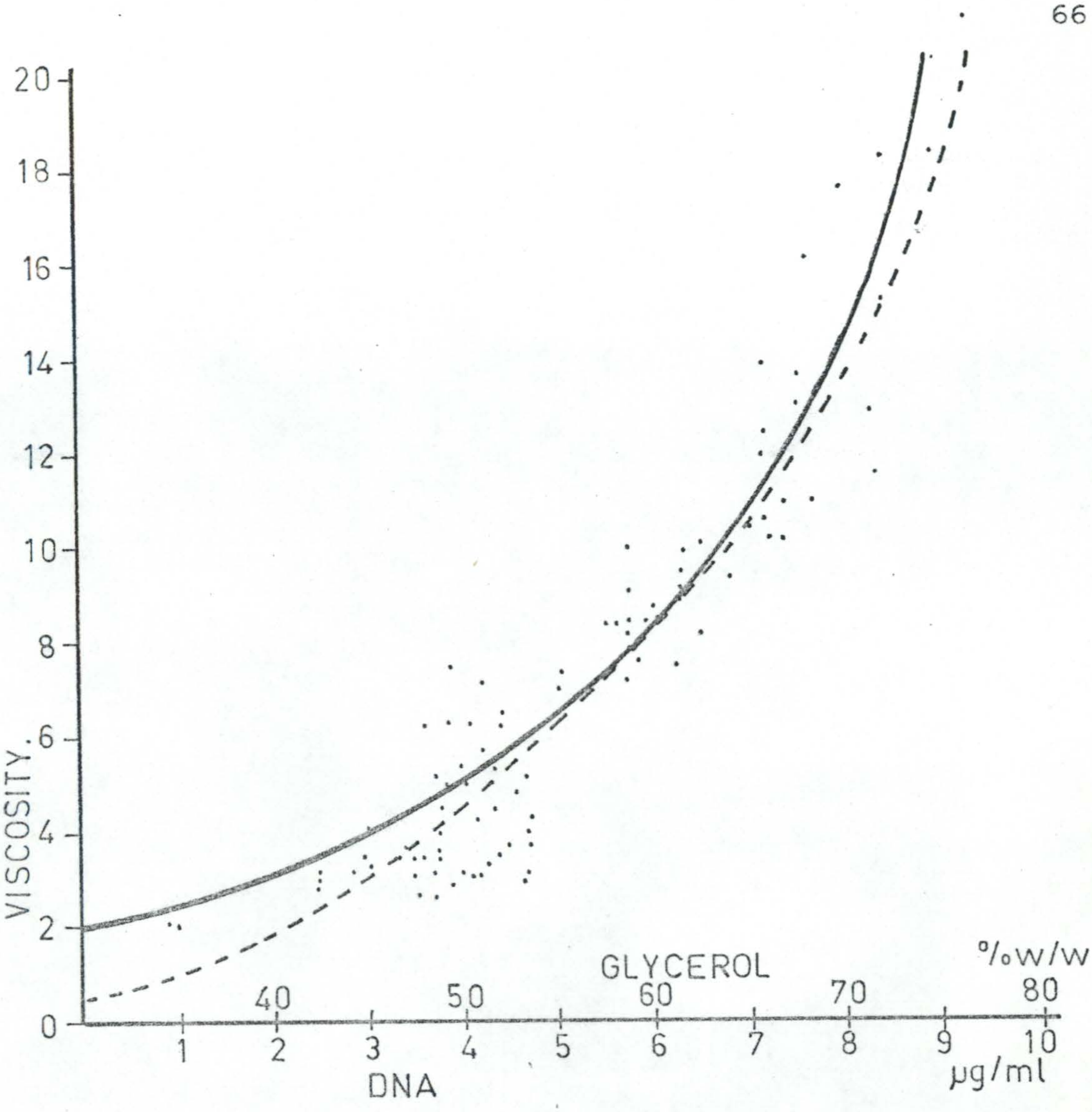

FIGURE 20

Relation between viscosity (η) and DNA content (µg/ml) The solid line is a portion of the curve showing the way viscosity increases as concentration of glycerol (% w/w) increase.

The dotted line is obtained from the regression:

$$\eta = \underset{(\pm\ 0.010)}{0.223^{***}} (\mathrm{DNA})^2 + 0.763 \ ; \ \mathrm{RSD}\ 1.63$$

VISCOSITY DEVELOPED BY SOMATIC CELLS SUSPENDED IN NORMAL SALINE

Carré (1970) found that the addition of somatic cells to milk and skim milk caused an increase in viscosity but this increase in viscosity was much less than that of milk from cows affected by mastitis. He concluded some other characteristic of mastitic milk was involved in the reaction. The DNA released from the added somatic cells did not have a permanent role in the augmentation of viscosity.

Known concentrations of leucocytes collected from milk were suspended in Normal Saline and the viscosity of these solutions after the addition of the reagent was measured with the Ruakura rolling ball viscometer.

ISOLATION OF LEUCOCYTES

Schalm *et al*. (1964) have shown that large increases in somatic cell counts can be caused by infusions of heat killed Coliform bacteria (*Aerobacter aerogenes*) into a normal lactating udder. These somatic cells can then be concentrated and washed (Nageswararao and Derbyshire, 1969; Carré, 1970).

(a) TREATMENT OF COW TO INDUCE A STERILE INFLAMMATORY RESPONSE

MATERIALS

(i) Heat killed infusion of Coliform bacteria.

A pure culture of a coliform bacteria* was identified as *Cloacae cloacae*. This was streaked to give confluent

---

* Supplied by Dr Marjorie Carter, Animal Health Diagnostic Centre, Ruakura Agricultural Research Centre, Hamilton.

growth on Milk Agar (Oxoid). The surface culture was scraped off the agar, emulsified in ¼ strength Ringers solution, and diluted to give a concentration of approximately 5×10^6 organisms per ml (as compared with Brown's opacity tubes). The suspension was killed by holding at 70°C for 10 minutes and checked for viable organisms*.

(ii) Sterile 5ml syringe (graduated) and "braunula".

(iii) Quarter milking buckets (National Dairy Association, New Zealand).

METHOD

After the evening milking 1ml of the heat killed infusion of Cloacae cloacae was introduced into a quarter of the cow's udder aseptically by injection through the teat sphincter with a sterile syringe and "braunula".

At the following milking milk from the treated and untreated quarters was collected into individual quarter milker buckets.

RESULTS

Milk from the treated quarters showed a marked increase in somatic cells - somatic cell counts were always in excess of 10^7 cells per ml. There was a depression of milk yield in the treated quarters.

(b) ISOLATION OF SOMATIC CELLS

MATERIALS

(i) Normal Saline Solution: Sodium chloride AR (0.85% w/v) was made up in distilled water.

---

* The Microbiology Section of the Waikato Dairy Laboratory typed and prepared this culture. Thanks are due to Mr W.E. Crawley and Mrs Marilyn Embling for their assistance.

METHOD

The milk collected from cows with sterile induced mastitis was centrifuged in 10ml glass centrifuge tubes at RCF of 2 500 for 20 minutes. The sediment was suspended in chilled normal saline, washed twice in normal saline, and the cell clumps were dispersed in a tissue grinder (Quickfit BC 15/150) of 150μ clearance. The resultant somatic cell suspension was diluted with normal saline solution.

RESULTS

Dilutions of somatic cells in normal saline were prepared and the viscosity developed after addition of reagent measured. The DNA content was measured and in the samples with higher numbers of somatic cells good repeatability was obtained. At low levels interference prevented accurate estimates of DNA content to be made. Values for DNA content, however, could be determined by extrapolation from the number of somatic cell suspension added.

These results are shown in Table 7 and Figure 21 shows the results along with the regression obtained from η with $(DNA)^2$.

DISCUSSION

Somatic cells in the absence of other milk constituents develop the same viscosity as similar somatic cell concentrations measured as DNA in herd milk. Viscosity is highly correlated to the DNA content of the samples. The findings of Scruggs and Ross (1964) that univalent cations decrease the viscosity of the CMT gel is not supported when 0.85% sodium chloride is used as a diluting medium.

DILUTION	VISCOMETER READING*	VISCOSITY (centipoise)	DNA (g/ml)	
			MEASURED	EXTRAPOLATED
0.40	10.00	1.61		2.25
0.50	8.95	2.10		2.82
0.55	8.25	2.49		3.10
0.60	7.00	3.38		3.38
0.65	6.35	3.98		3.66
0.70	5.70	4.72		3.94
0.80	5.15	5.49		4.50
0.90	4.15	7.42		5.07
1.00	3.90	8.05		5.60
1.25	3.30	9.97	6.0	7.04
1.50	2.75	12.5	6.4	8.45
2.00	1.80	20.4	9.3	11.27
3.00	1.35	28.0	16.9	16.90

* Viscometer Reading is mean of duplicates

TABLE 7

Viscosity developed by somatic cell suspensions after addition of the reagent (secondary alkyl sulphate).

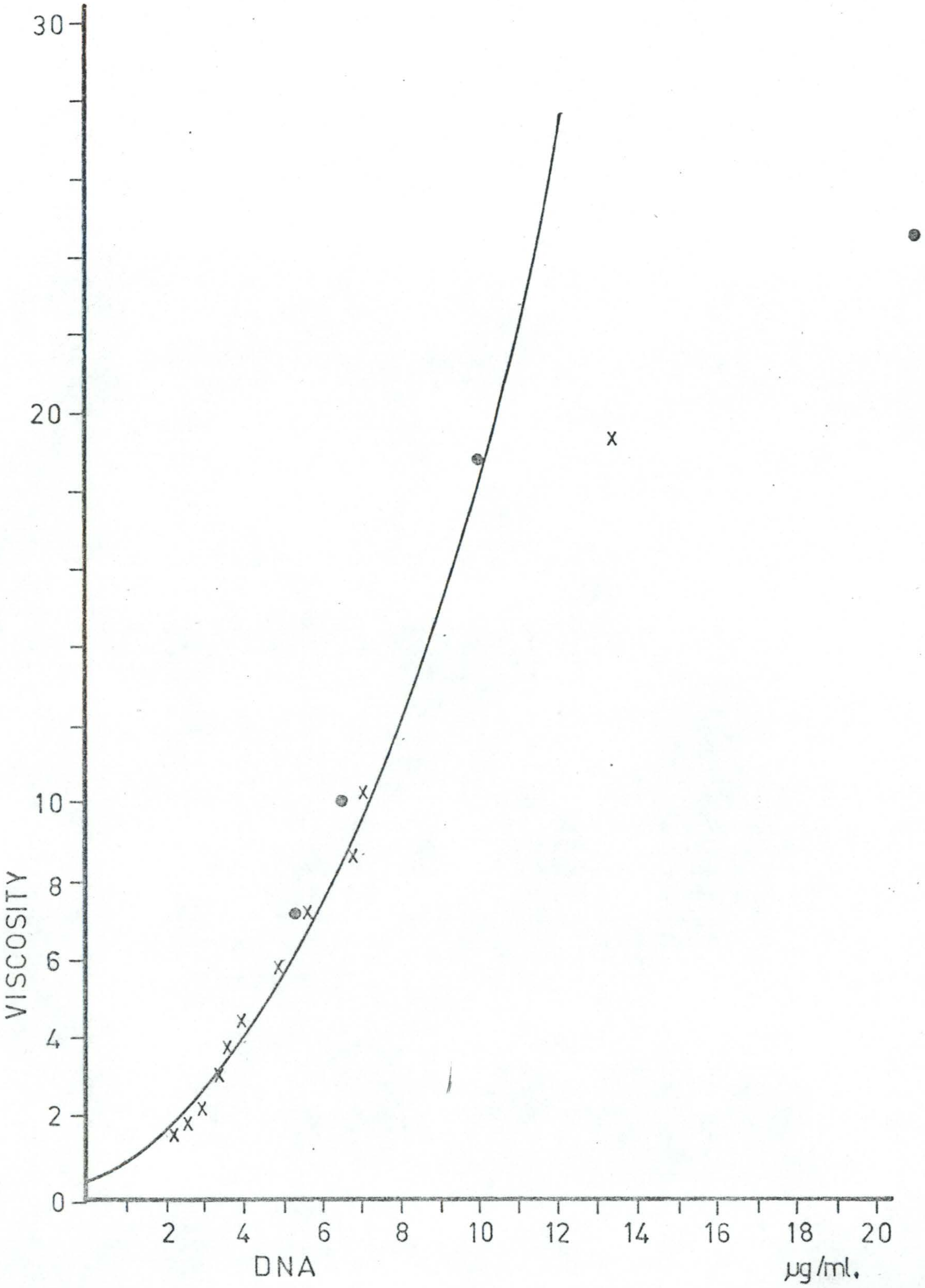

FIGURE 21

Viscosity developed by somatic cells suspended in normal saline.

The solid points are measured DNA values and the crosses are extrapolated from the point giving the highest value for DNA (i.e. highest recovery of somatic cells from saline).

INFLUENCE OF OTHER MILK CONSTITUENTS ON VISCOSITY

Studies on the mechanism of gel formation in the CMT reaction have implicated proteins (Dedie and Kielwein, 1960; Obiger, 1961; Christ, 1962; Nageswararao and Derbyshire, 1969). In the mechanism of gel formation of the Whiteside mastitis test the fat content of the milk has been implicated (Schalm and Noorlander, 1957; Nageswararao and Derbyshire, 1970).

Measurements of viscosity, DNA content, Fat percentages and protein percentage were made on 56 samples.

METHOD

The milk samples were tested by the Ruakura rolling ball viscometer and for DNA content as described previously. The determination for fat percentage and protein percentage were conducted on IRMA*.

RESULTS

The data and the analysis is presented in Appendix 5.

The trivariate linear regression and the bivariate linear regression of DNA and protein percentage on η have a higher standard error than analysis considering the DNA variable only.

DISCUSSION

In the herd milks used in this study the fat and protein percentage have a non-significant effect on the viscosity developed by these milks when the reagent is added.

Consideration of the DNA content alone yields a better estimate of the viscosity developed.

---

* The Chemical Services Section, Ruakura Agricultural Research Centre are acknowledged for conducting all measurements with IRMA (Infra Red Milk Analyser).

EFFECT OF PROTEINS ON THE VISCOSITY DEVELOPED IN MODEL SYSTEMS CONTAINING MILK AND ADDED SOMATIC CELLS

As well as being involved in the CMT reaction milk proteins do show viscosity changes in the presence of surface active agents (Leonard and Forster, 1961; Imanshi *et al*., 1965; Green, F.A., 1971; Green, M.L., 1971; Niki *et al*., 1971).

A series of proteins of bovine origin were tested to see if the addition of whole milk or leucocytes caused changes in the viscosity of the gel.

MATERIALS

(i) Normal Saline, as previously described.

(ii) N Sodium Hydroxide, AR.

(iii) N Hydrochloric Acid, AR.

(iv) Sodium Caseinate (New Zealand Co-operative Dairy Company Ltd). 2.5% w/v in distilled water.

(v) Albumin-Bovine. Cohn Fraction V powder (pfs) 96-99% Albumin (Sigma Chemical Company). 2.5% w/v in distilled water.

(vi) Globulins- Bovine. γ-Globulins Cohn Fraction II (pfs). Electrophoretic purity, approximately 99% (Sigma Chemical Company) 2.5% w/v in distilled water.

All proteins were made up by dissolving 2.5g in 100ml of distilled water with the addition of 1ml N Sodium Hydroxide. After solubilisation the pH was adjusted to 6.8 with N Hydrochloric acid.

(vii) Milk with low somatic cell content. This was collected from a Jersey cow in the sixth week of lactation from the herd at No.3 Dairy, Ruakura Agricultural Research Centre.

(viii) Milk with an elevated somatic cell count. This was obtained from a Jersey cow after a sterile infusion of Cloacae cloacae (previously described).

METHOD

Milks with a low and high somatic cell count had normal saline and protein solutions added to them. The viscosity was determined with the Ruakura rolling ball viscometer.

Washed somatic cells were also added to these solutions and the viscosity recorded.

RESULTS

The results are presented in Tables 8 and 9.

In both experiments the proteins had a significant effect ($p = 0.05$) on the viscosity as measured by the Ruakura rolling ball viscometer. Results of analysis by Duncan's multiple range test at the 5% level are indicated in the tables.

DISCUSSION

The influence of proteins on the viscosity developed in the CMT reaction is not clear. The situation in milk appears different from that when somatic cells are suspended in protein solutions. When somatic cells are suspended in sodium caseinate there is an increase in viscosity. This supports the work of Nageswararao and Derbyshire (1969) but sodium caseinate added to milk caused a decrease in the viscosity. Albumin and Globulin when added to milk caused a viscosity increase. When isolated somatic cells were resuspended in a solution of Albumin there was a decrease in viscosity when compared to the viscosity developed by a similar amount of somatic cells suspended in normal saline.

	VISCOMETER READING*			
	Low Somatic cell content milk	High somatic cell content milk		
DILUENT	4ml+1ml diluent	2ml+3ml diluent	1ml+4ml diluent	TREATMENT TOTALS**
Normal Saline	9.95	1.20	2.50	13.65 b
Sodium caseinate	9.80	1.20	3.00	14.00 cd
Albumin	9.75	0.90	2.50	13.15 a
Globulin	9.75	1.00	2.45	13.20 e
Sodium caseinate) Albumin)	9.90	1.05	2.55	13.50 b
Sodium caseinate) Globulin)	9.90	1.20	3.00	14.10 d
Albumin) Globulin)	9.95	1.15	2.85	13.95 c
Sodium caseinate) Albumin) Globulin)	9.90	0.85	2.50	13.25 a
BLOCK TOTALS	78.90	8.55	21.35	GRAND TOTAL 108.80

* Viscometer reading is mean of duplicates

** Treatments without a letter in common are significantly different at the 5% level (Duncan's multiple range test)

TABLE 8

The effect of proteins on the estimate of viscosity as recorded by the Ruakura Rolling Ball Viscometer.

ANALYSIS OF VARIANCE

SOURCE OF VARIATION	SUM OF SQUARES	DEGREES OF FREEDOM	MEAN SQUARE
TREATMENTS	0.343333	7	0.049048
BLOCKS	351.040208	2	175.520104
RESIDUAL	0.244792	14	0.017485
TOTAL	351.628333	23	-

Treatment Effect Ftest = 2.805174*

Block Effect Ftest = 10 038.324507***

DILUENT	VISCOMETER READING I	II	III	IV	TREATMENT TOTALS*
Normal Saline	6.50	8.50	4.90	5.80	25.70 b
Sodium caseinate	6.50	7.20	5.00	5.10	23.80 a
Albumin	7.30	8.20	9.20	9.50	34.20 c
Globulin	7.80	8.30	5.70	5.60	27.40 b
BLOCK TOTALS	28.10	32.20	24.80	26.00	111.10

* Treatments without a letter in common are significantly different at the 5% level (Duncan's multiple range test).

TABLE 9

The effect of resuspending leucocytes in different diluent solutions on the viscosity developed upon reagent addition as determined by the Ruakura rolling ball viscometer.

ANALYSIS OF VARIANCE

SOURCE OF VARIATION	SUM OF SQUARES	DEGREES OF FREEDOM	MEAN SQUARE
Treatments	15.381875	3	5.127292
Blocks	7.921875	3	2.640625
Residual	11.495625	9	1.277292
Total	34.799375	15	-

Treatment Effect Ftest = 4.014189*

Block Effect Ftest = 2.067362

In herd milk the protein content as such does not influence the viscosity of the CMT get but it is obvious the constituent protein of a milk sample could exert an effect. Further investigation of this effect is warranted.

REACTION OF SOMATIC CELLS WITH TEEPOL

Nageswararao and Derbyshire (1969) found that on microscopic examination the gel formed in the CMT reaction appeared as an irregularly arranged fibrillar network containing DNA. When the somatic cell count was less than 2×10^7 cells per ml the gel structure was not maintained on formalin fixation, and insufficient DNA was present to be detected by staining and microscopic examination.

A different method of preparation and staining sections of the CMT gel is described.

MATERIALS

(i) As described for DMSCC (Appendix 2)

(ii) Normal Saline (previously described).

(iii) CMT reagent : 4% v/v Shell "Teepol 610" in water.

(iv) Non Ionic surface active agent : 4% v/v "Triton X-100" (Rohm and Hass Ltd) in water.

METHOD

Milk (0.01ml) was placed on a clean glass microscope slide and to this was added either 0.01ml of normal saline, 0.01ml of CMT reagent, or 0.01ml of non-ionic surface active agent. Mixing of the two solutions was minimal to prevent breakdown of any structure present in the milk smears. These smears were dried in a current of warm air, fixed, defatted and stained as for the DMSCC (Appendix 2). The smears were examined with an oil immersion lens under phase contrast illumination.

Photomicrographs were obtained with a Wild Mk II a photomicrographic camera mounted on a Wild M 20 binocular microscope using a quartz iodine light source. The total magnification of the image recorded on the film was 625 times.

RESULTS

The appearance of normal somatic cells in smears of herd bulk milk diluted with normal saline is shown in figure 22. The darkly stained nucleus can be seen surrounded with cytoplasm. The addition of normal saline solution to the milk samples has caused no change in the appearance of the somatic cells. Figure 23 shows the somatic cells after treatment with 4% Triton X-100. The discrete appearance of the nuclei of the somatic cells is not altered.

Under the influence of Teepol changes occur in the appearance of the somatic cells. In the manner of preparation of milk smears as described above there is a gradient of Teepol concentration set up. At very low levels of Teepol the margins of the somatic cells appear to become invaginated and fibrillar in appearance; this process gradually becoming more extensive as the darkly stained cell nuclear material becomes involved in the reaction (figure 24). As the Teepol concentration increases this process becomes very marked and fibrillar extensions from the cellular components can be clearly demonstrated (figure 25).

As this process becomes more extensive (in greater concentrations of Teepol) the fibrillar extensions can link between nuclear loci giving rise to an interconnecting network of darkly stained strands of material apparently emanating from alteration and relocation of cellular nuclear material (figure 26). The herd milk used for these photomicrographs had approximately 10^6 somatic cells/ml.

The fibrillar network becomes more extensive and complex where more somatic cells are present and the amorphous conglomerates of viscous material noted on smear preparation are in fact complex knots of degraded nuclei meshed together by these fibrillar extensions (figure 27). These samples had 5×10^6 somatic cells/ml.

DISCUSSION

In the restricted range of the Ruakura rolling ball viscometer there is a correlation between viscometer reading and DNA content of the milk samples.

The relationship between viscosity and DNA is not a simple relationship but consideration of the glycerol data (figure 8) shows the reason for this. As the concentration of the substances causing the viscosity increases the resultant curve depicting this viscosity increase follows a hyperbola (for newtonian solutions). Robins (1964) found DNA solutions exhibit non-newtonian behaviour.

At low concentrations of DNA the gel is particularly shear sensitive and in conjunction with its non-newtonian behaviour, these factors would cause an anomaly between the fitted regression and the glycerol data.

The concentration of the DNA in the milk sample is highly correlated to the viscosity developed in the CMT reaction. Previous evidence on the role of DNA in the reaction had been indirect by demonstration of the destruction of viscosity after treatment of the sample with Deoxyribonuclease I (Carrol and Schalm, 1962; Richter et al., 1968 ; Nageswararao and Derbyshire, 1969).

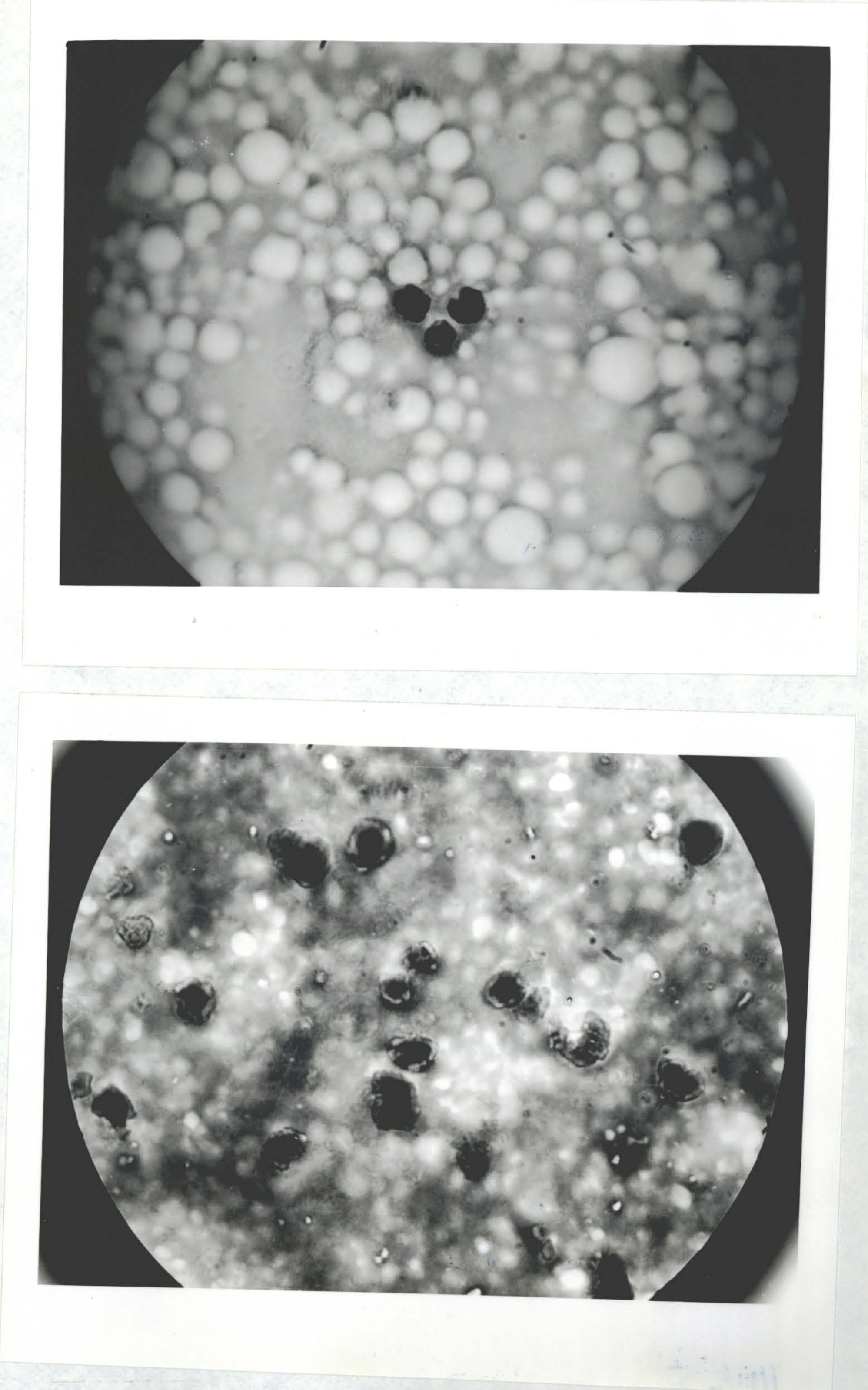

FIGURE 22

Appearance of somatic cells in milk smears diluted 1:1 with normal saline.

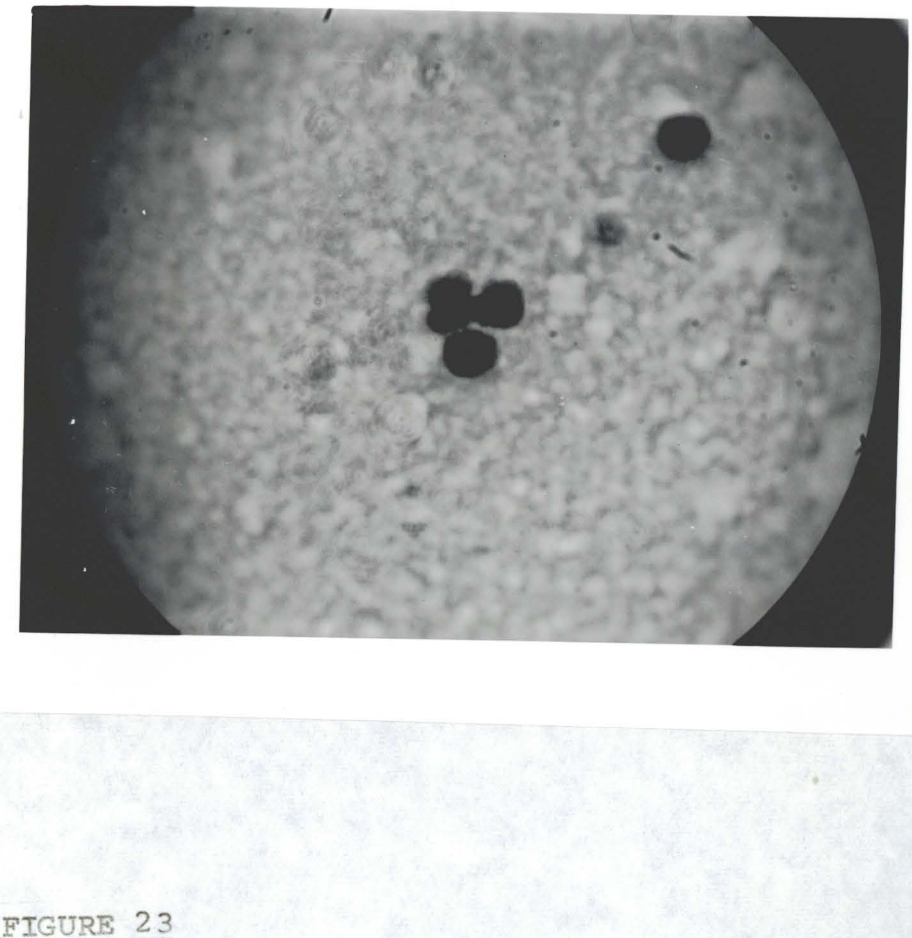

FIGURE 23

Somatic cells in milk after dilution of milk 1:1 with Triton-X-100

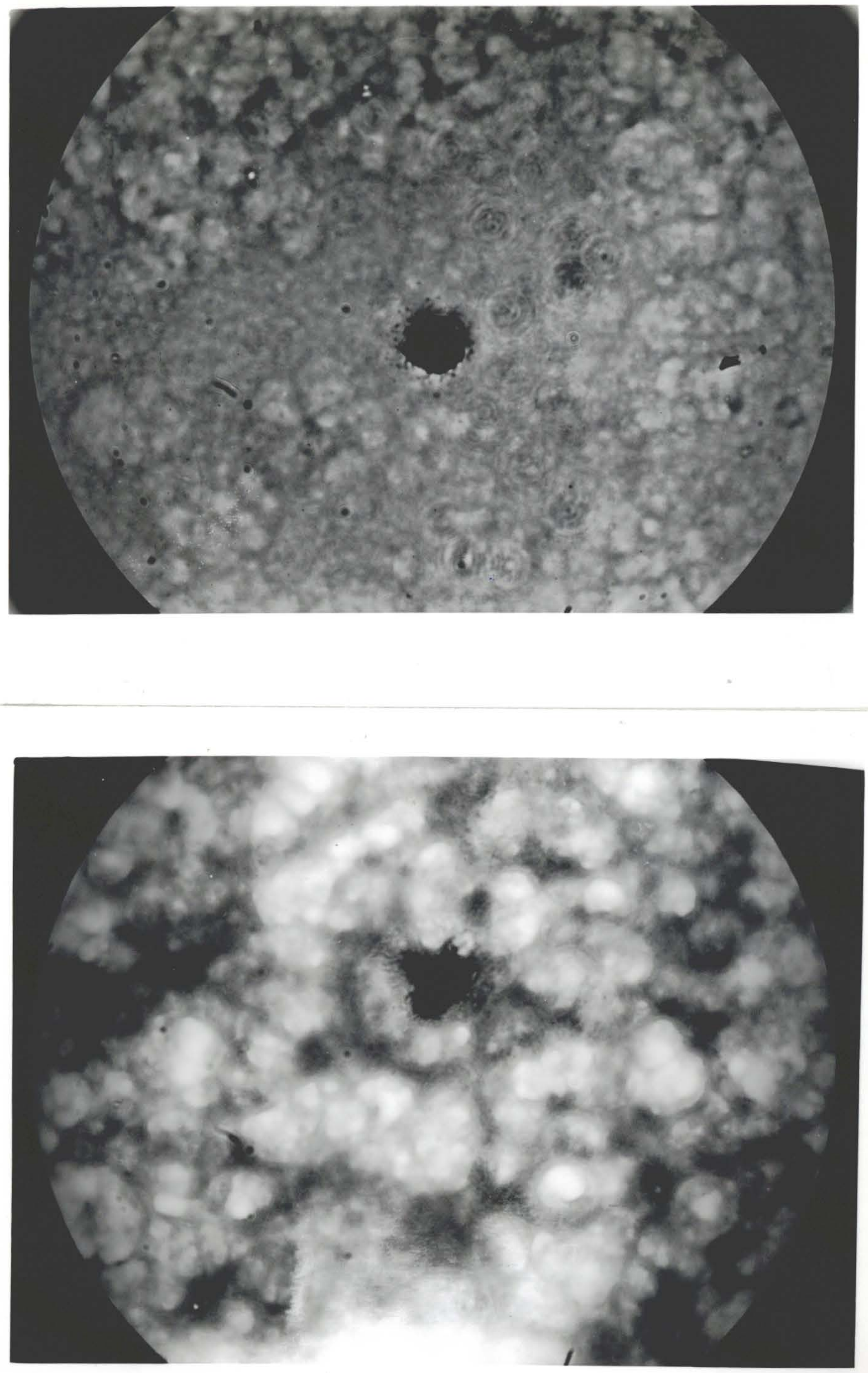

FIGURE 24

Somatic cells in a low concentration of Teepol. Changes can be seen in the structure of the cell walls.

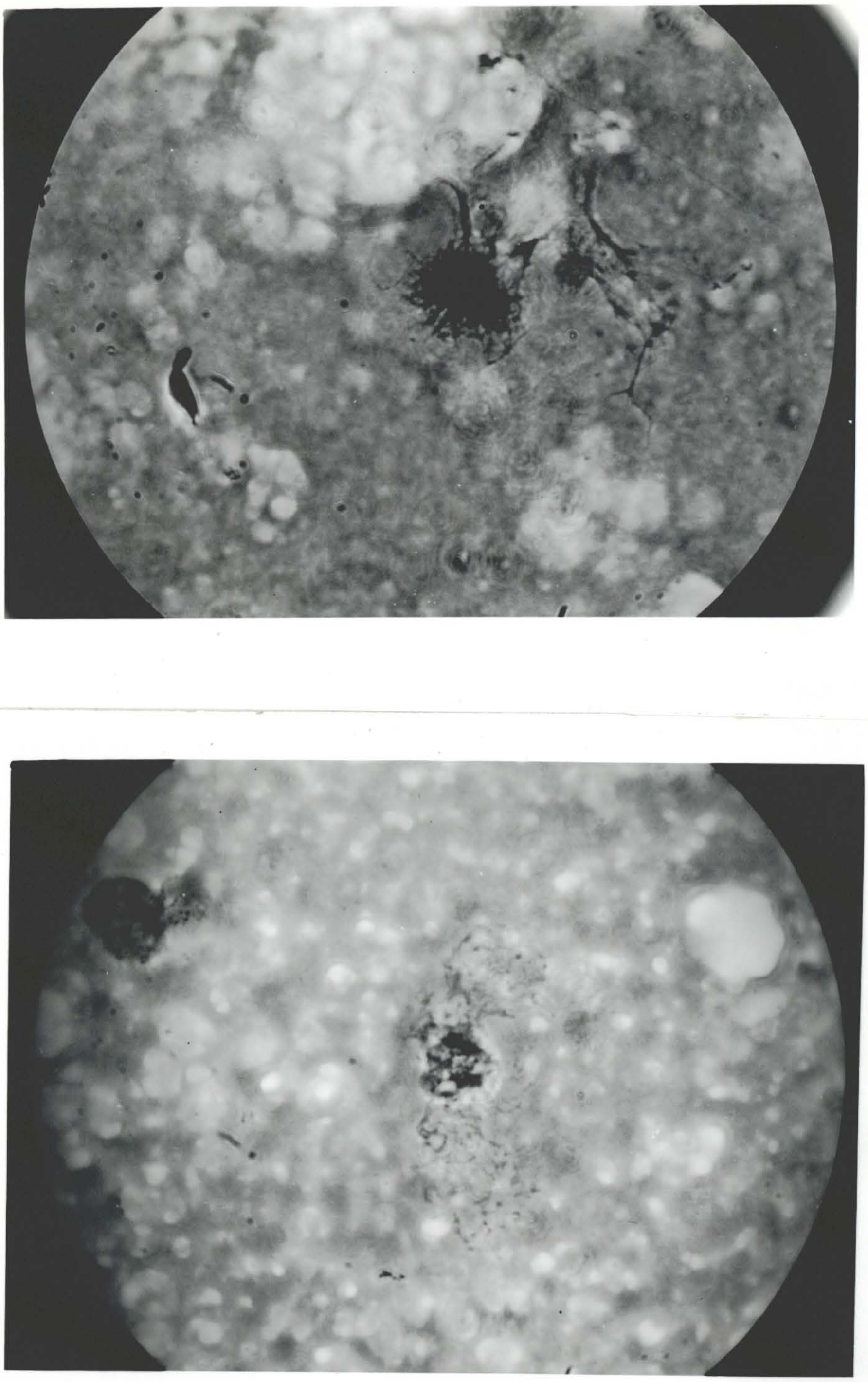

FIGURE 25

At a higher concentration of teepol (closer to the point source of teepol on the wet smear) more extensive changes can be seen in the cell walls and nucleus involvement is becoming visible.

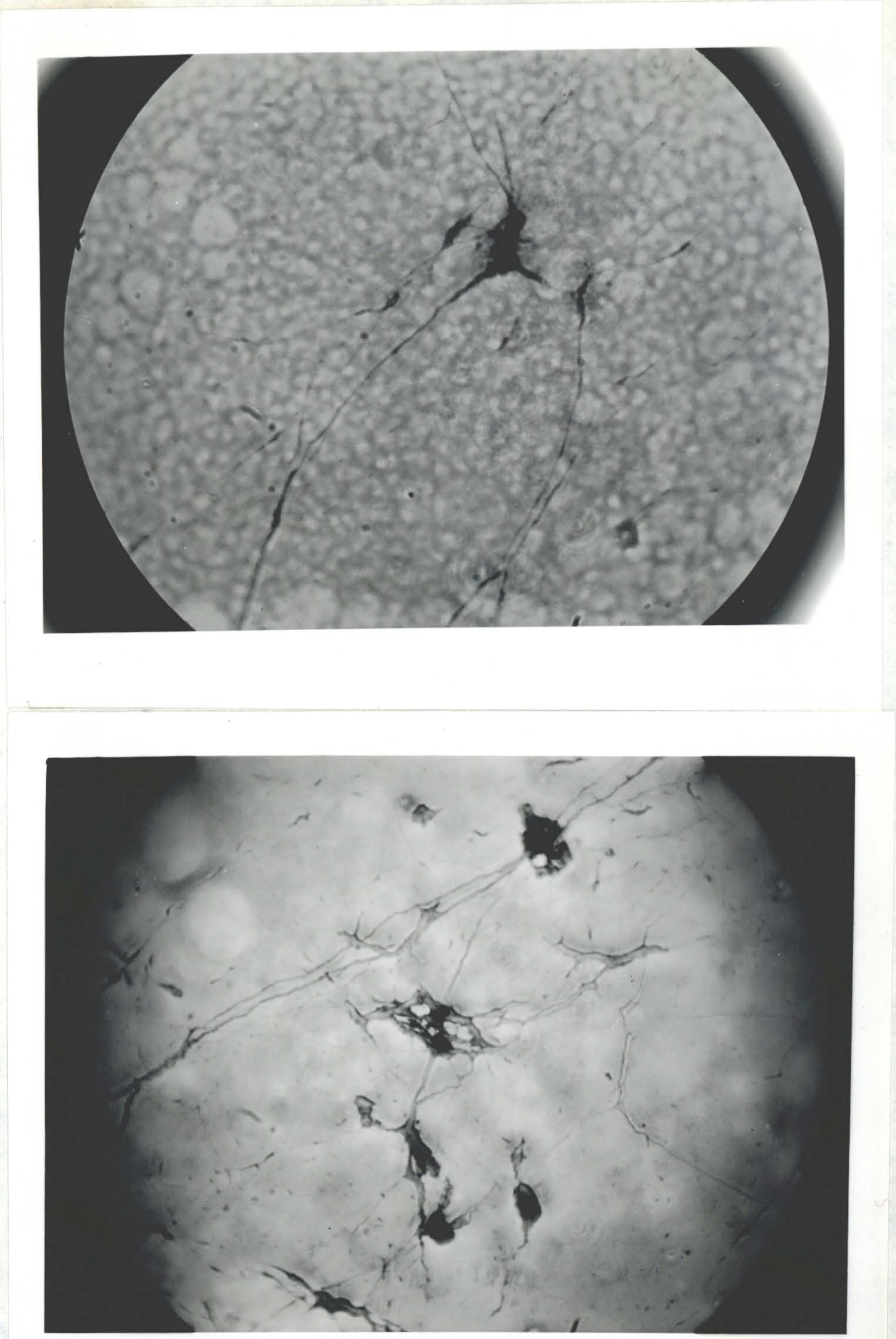

FIGURE 26

The nucleus becomes altered in appearance and fibrils of heavily staining material cross-link different nuclei loci.

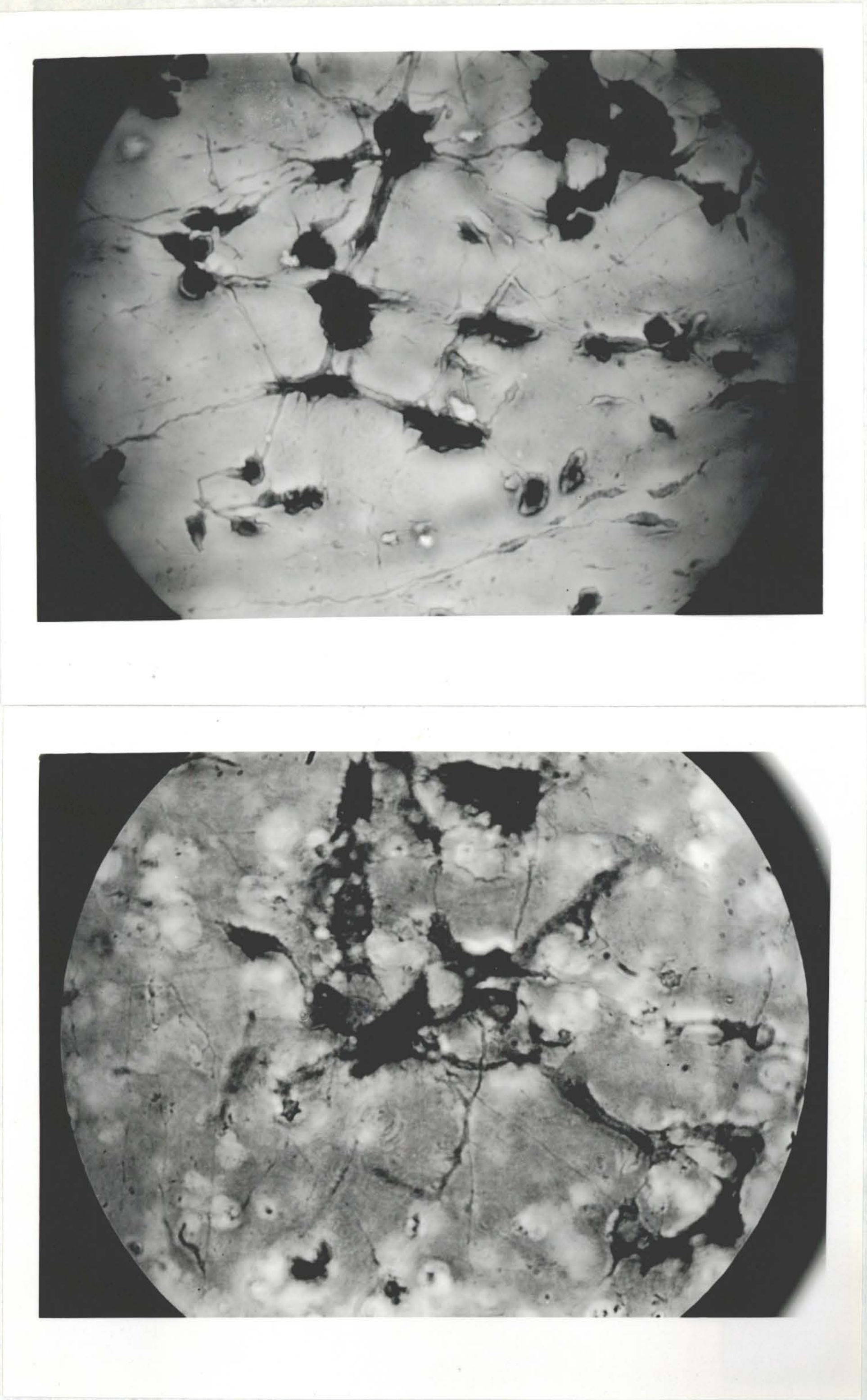

FIGURE 27

At high levels of somatic cells the fibrillar network becomes extensive. This is the component that causes the visible increase in viscosity.

PRACTICAL CONSIDERATIONS FOR USE OF RUAKURA ROLLING BALL VISCOMETER

AGE OF MILK SAMPLE BEING TESTED

Reports that the viscosity of the CMT gel decreases as the age of the milk sample increases have been made by Kroger and Jasper (1966), Brazis *et al*., (1967), Funk *et al*., (1967), Astermark (1969a,b), Read *et al*., (1969), Carré (1970), Custer (1971) and Postle (1971). Nageswararao and Derbyshire (1969) showed that the viscosity developed by milk in the CMT reaction decreased as the proportion of live leucocytes in the milk decreased with time.

The Ruakura rolling ball viscometer can detect small changes in gel viscosity and can be used to measure the changes that occur in viscosity with increasing time.

MATERIALS

The total milk from an a.m. milking was drawn from a Jersey cow in the third month of lactation. The sample was well mixed and distributed into individual McCartney bottles for storage at different temperatures.

The viscosity was determined as described previously with the Ruakura rolling ball viscometer.

Determinations of the DNA content of the samples were made by de Langen's method (Appendix 3).

Bacterial counts (Total plant counts) were made in accordance with Standard Methods on Oxoid milk agar and incubated for 72 hours at 30°C.

METHOD

The milk samples were held in temperature controlled water baths at three temperatures, 5, 15 and 20°C.

Viscosity, DNA content and bacterial count were determined at intervals throughout a 60 hour period.

RESULTS

Typical results of an aging experiment are shown in figure 28 for the three temperatures tested. There is a distinct decrease in the viscosity of the 20°C samples after 24 hours. The viscosity decrease is lower in the 5° and 15°C samples.

The DNA content is shown in figure 29. Rather than remaining constant this has increased in all temperature ranges. The explanation is provided by the following graph (figure 30) which shows the increase in bacterial count over the testing period.

DISCUSSION

There is a decrease in viscosity and this appears to be accentuated after 24 hours for samples stored at 20°C but at 5°C samples could be stored for as long as 36-48 hours without great errors being introduced. The logarithmic increase in bacterial count is reflected in the DNA content but bacterial DNA does not enter the CMT reaction. This has been confirmed by microscopic examination. The decrease in viscosity could be due to death of somatic cells and hence being unable to enter the reaction (Nageswararao and Derbyshire, 1969) or somatic cells being utilised as a food source by bacteria and the DNA being denatured by lysosome.

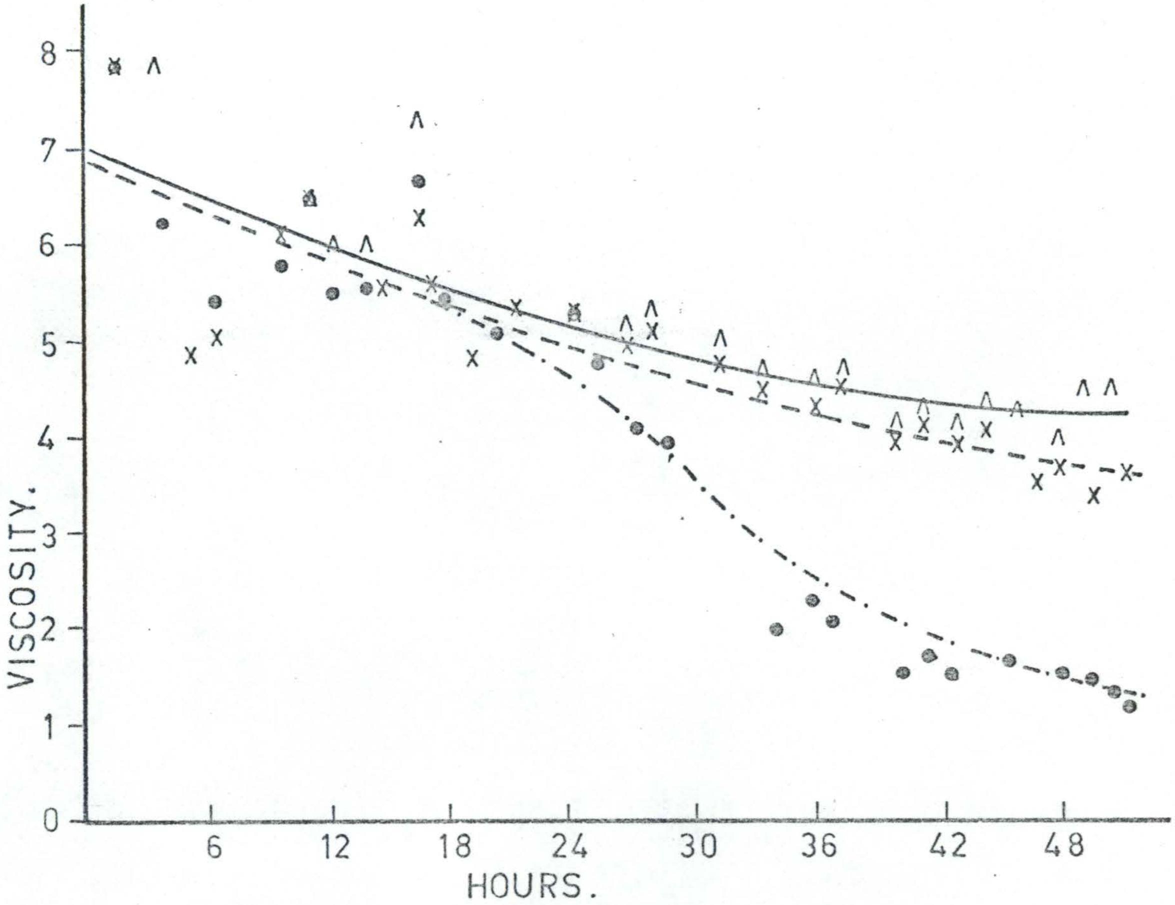

FIGURE 28

Decrease in viscosity with increasing time at different temperatures (curves are trend curves only)

Λ———Λ 5°C

X- - - - - - -X 15°C

●—·—·—·—● 20°C

(Data presented in Appendix 9)

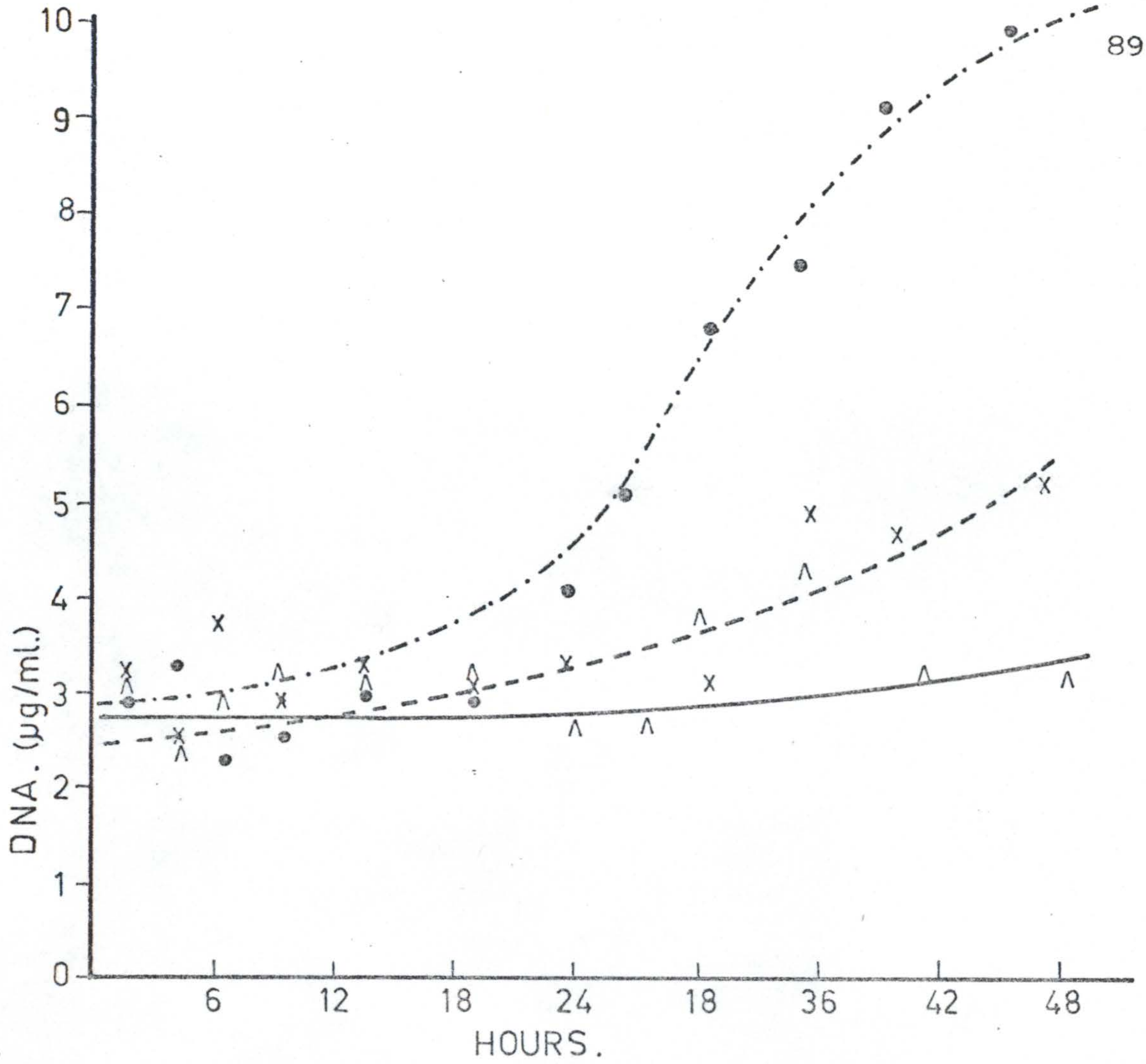

FIGURE 29

Increase in DNA content with increasing time at different temperatures.

Λ———————Λ 5°C

X— — — — — —X 15°C

●— · — · — · —● 20°C

(Data presented in Appendix 9)

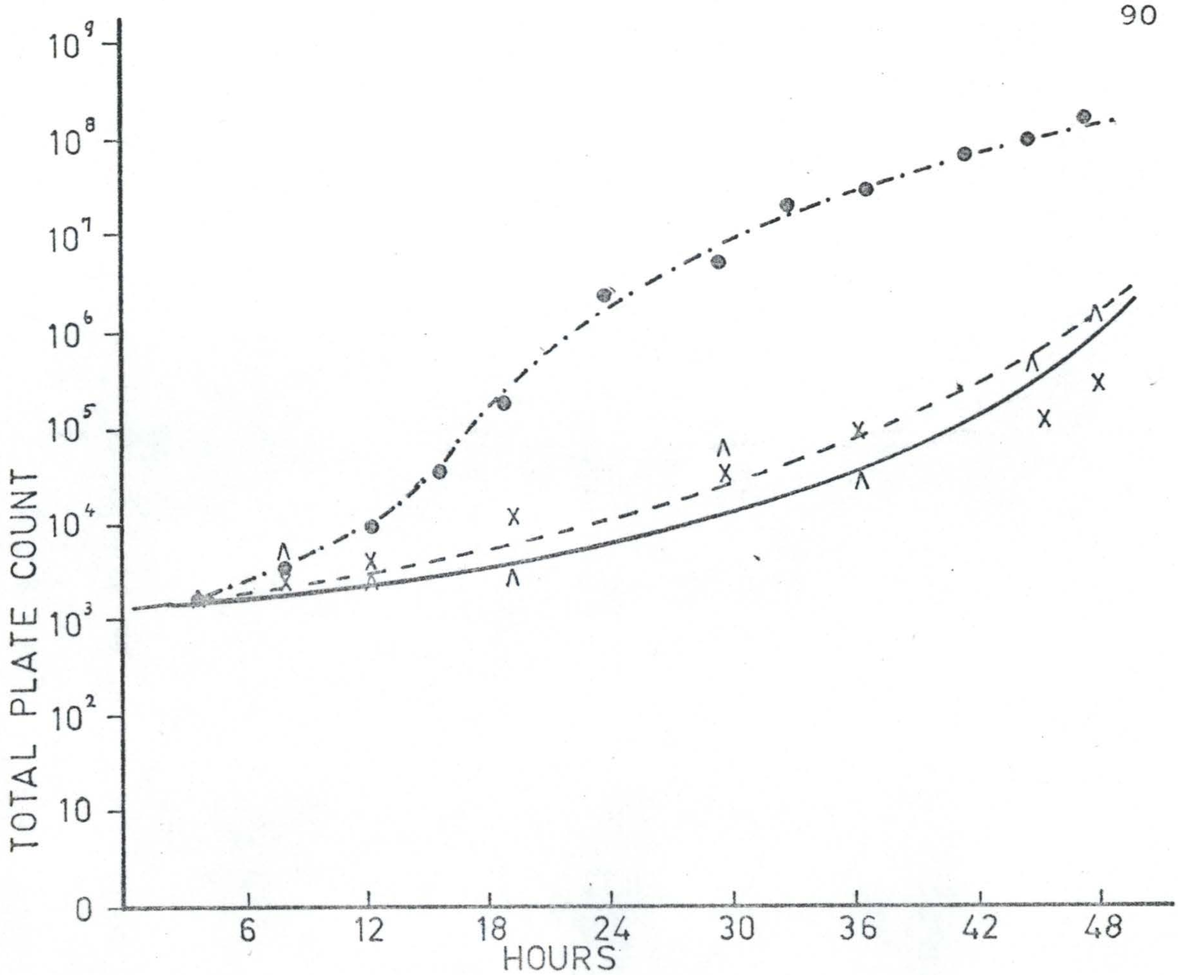

FIGURE 30

Increase in total bacterial count at different temperatures with increasing time.

Λ———————Λ 5°C

X— — — — — — —X 15°C

●—·—·—·—·—·● 20°C

(Data presented in Appendix 9)

PRESERVATIVES FOR MILK SAMPLES

For samples that cannot be tested immediately preservatives may be required. Boric acid has been found suitable to preserve milk for the CMT reaction by Schalm (1962); Buchler (1965) and Funk *et al*., (1967). Juffs (1972) has reported the use of a boric acid, potassium sorbate and glycerol mixture as a preservative for milks for later bacteriological examination.

Funk *et al*., (1967) also tested the use of formaldehyde, mercuric chloride, sodium dichromate and hydrogen peroxide. As a preservative for milk to be tested with the CMT reaction these are unsuitable.

Two preservative compounds have been tested in this study in conjunction with the aging trials.

MATERIALS

As described on page 86.

The preservatives tested were:

(i) Boric acid Cryst : 1% (w/v)

(ii) Potassium Cyanide: 0.01% (w/v)

METHOD

The preservatives were added to individual McCartney bottles - in the case of boric acid as crystals (1 gm per 100 ml) and the potassium cyanide as 0.5 ml of a 0.02% (w/v) solution per 100 ml. These bottles were stored under similar conditions as those previously (at 5° and 20°C only). The same tests as those mentioned previously were carried out on all samples.

RESULTS

At 5°C there is no advantage in adding preservatives - refrigeration at this temperature appears adequate.

At 20°C the boric acid extended the testing period approximately another 24 hours (see figure 31). The Potassium cyanide had no measurable preservative effect.

DISCUSSION

Milks that cannot be tested immediately by the Ruakura rolling ball viscometer should preferably be held at 5°C. If samples must be held at higher temperatures (up to 20°C) the retardation in viscosity development that occurs with age can be prevented for approximately a further 24 hours by the addition of boric acid (1% w/v).

EFFECT OF DIFFERENT OPERATORS

Different operators were compared in using the Ruakura rolling ball viscometer to see if operator effects markedly affected the results obtained.

MATERIALS

Herd milk samples were collected at a Milk Treatment Station and their temperature equilibrated to ambient temperature before testing.

METHOD

EXPERIMENT 1.

Ten samples of herd milk were tested on the Ruakura rolling ball viscometer by each operator in a random sequence. Each of the ten samples had its somatic cell content estimated by the DMSCC.

RESULTS

The somatic cell content of the ten samples is shown in Table 10.

Standard deviations for each of the 5 operators was calculated by the method of difference between duplicates and the correlation coefficient between inverse of

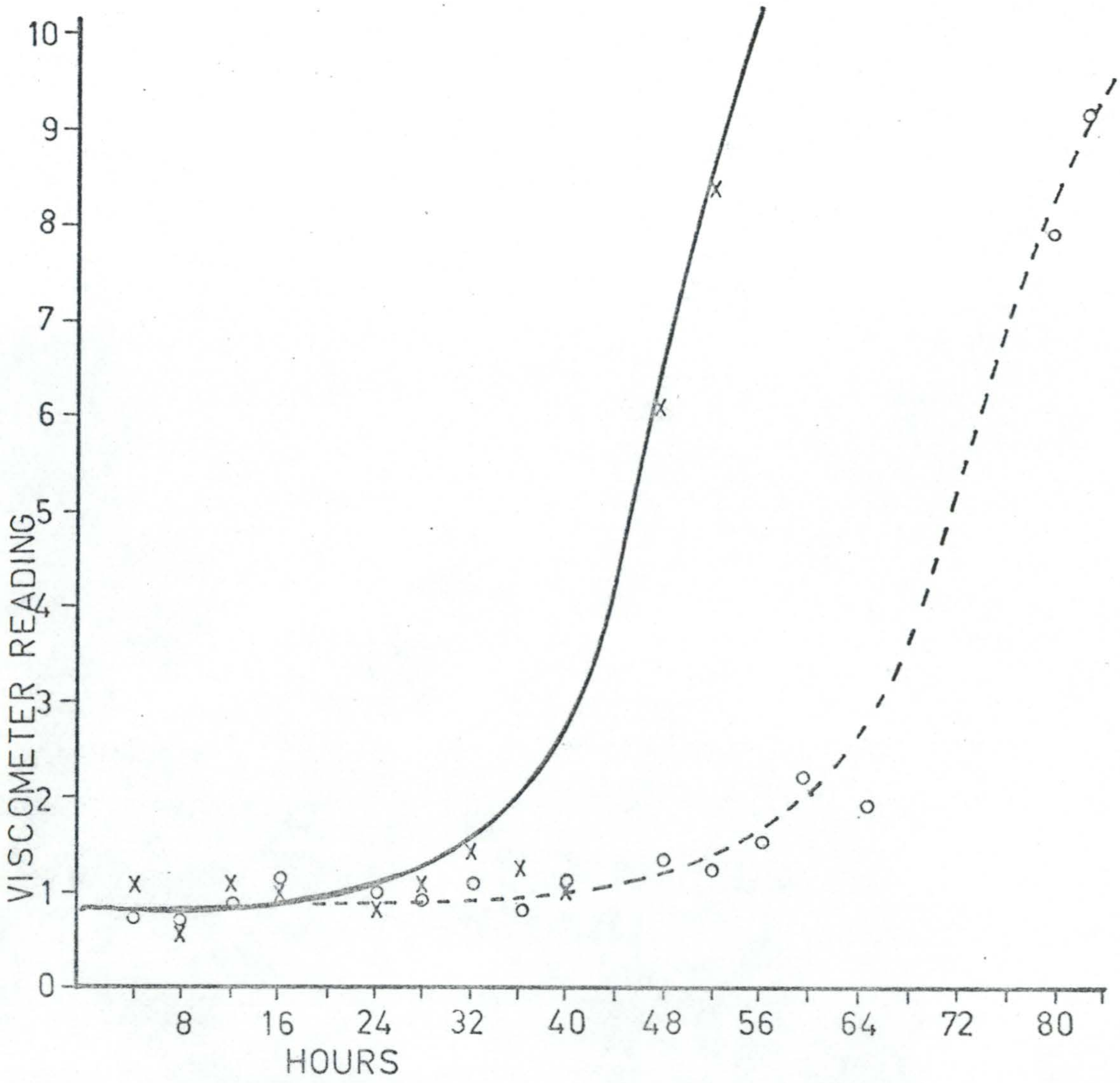

FIGURE 31

The effect of boric acid (1% w/v) on the decrease in viscosity (increase in Viscometer Reading) with the aging of milk at 20°C. Experimental data is shown in Appendix 9.

x ———————— x No preservative

o - - - - - - - - - o 1% Boric acid added

Viscometer Reading and DMSCC for each operator is shown in Table 11.

The results obtained by each operator are given in Table 12. Analysis of the results shows there is a significant difference between operators. The overall standard deviation for the viscometer readings in this experiment is 0.41.

Although there is a significant difference between operators they have a highly significant similarity in the ranking of the ten samples (Kendall coefficient of concordance, W = 0.928***. See Appendix 6). The results transformed by ranking are shown in Table 13.

DISCUSSION

In this randomised block experimental design any effects due to time (i.e. the difference in time caused by operators testing all 10 samples before the next operator) would be compounded into the operator effect. The experimental design was modified so as the effect of time could be analysed separately from the operator effects.

METHOD

EXPERIMENT 2

Ten samples of milk were collected from the same source as that used in Experiment 1. The five operators were randomly given a position by drawing letters from a hat. The ten milk samples were then analysed using randomised Latin Squares. (Table 14).

RESULTS

The results are presented in Table 15.

There is a significant difference between operators and also the time of testing (10% level - i.e. the

SAMPLE NUMBER	DMSCC $\times 10^5$
1	5.38
2	9.96
3	7.32
4	4.96
5	6.79
6	4.44
7	6.10
8	10.48
9	7.02
10	10.17

TABLE 10

Direct Microscopic Somatic Cell Count of milk samples used in Experiment 1 to determine operator effects on the Ruakura rolling ball viscometer.

OPERATOR	STANDARD DEVIATION	CORRELATION COEFFICIENT
1	0.14	0.887
2	0.18	0.915
3	0.30	0.858
4	0.20	0.870
5	0.13	0.892

TABLE 11

Standard deviations and correlation coefficients for 5 operators testing a standard series of 10 samples with the Ruakura rolling ball viscometer.

	VISCOMETER READING										
MILK SAMPLE OPERATOR	1	2	3	4	5	6	7	8	9	10	TOTAL
1	9.0	4.2	3.9	8.9	7.5	8.6	8.7	3.5	4.7	3.7	
	9.0	4.7	4.0	8.8	7.5	8.5	8.6	3.7	4.7	3.5	125.7
2	9.0	4.5	4.4	9.0	7.8	8.7	9.0	3.1	5.0	4.1	
	9.0	5.0	4.6	9.1	7.6	8.6	8.8	3.5	5.2	4.3	130.3
3	8.8	5.5	4.5	9.3	6.5	8.9	8.8	4.2	4.6	3.5	
	8.9	5.1	4.3	9.0	7.1	8.3	8.3	3.5	4.7	4.0	127.8
4	8.9	4.7	3.6	8.9	7.8	8.4	8.8	3.5	5.3	3.8	
	9.5	3.5	3.7	9.1	7.7	8.7	8.9	3.3	5.0	4.1	127.2
5	9.5	5.9	5.9	9.2	8.2	9.0	8.9	3.9	5.8	5.0	
	9.4	6.0	5.8	9.4	7.9	9.0	8.9	4.2	5.8	4.8	142.5
TOTAL	91.0	49.1	44.7	90.7	75.6	86.7	87.7	36.4	50.8	40.8	653.50

TABLE 12

Results obtained by 5 different operators on 10 samples of herd milk with the Ruakura rolling ball viscometer.

ANALYSIS OF VARIANCE

SOURCE OF VARIATION	SUM OF SQUARES	DEGREES OF FREEDOM	MEAN SQUARE
OPERATORS	6.5602	4	1.6401
SAMPLES	471.5022	9	52.3891
RESIDUAL	6.0956	36	0.1693
DUPLICATES	1.9890	50	0.0040
TOTAL	486.1470	99	

OPERATOR EFFECT Ftest = 9.6875***

SAMPLE EFFECT Ftest = 309.4454***

DUPLICATE EFFECT Ftest = 0.0236 (not significant)

	MILK SAMPLE									
OPERATOR	1	2	3	4	5	6	7	8	9	10
1	1	7	8	2	5	4	3	9.5	6	9.5
2	2	7	8	1	5	4	3	10	6	9
3	2	6	8	1	5	3	4	9	7	10
4	1	7	9	2	5	3	4	10	6	8
5	1	6	7	2	5	3	4	10	8	9

$$W = 0.928$$

$$X^2 = 41.7^{***}$$

Note: Least viscous samples (highest viscometer reading) have been assigned rank of 1.

TABLE 13

Milk samples from Experiment 1 arranged by ranking on Ruakura rolling ball viscometer reading.

operator's position in the queue as determined by the Latin Square).

The data was ranked and the Kendall coefficient of concordance, W = 0.958***. The different operators have applied essentially the same standards in ranking the ten milk samples. The data arranged by ranking is presented in Table 16.

DISCUSSION

Although different operators have poor agreement in absolute terms there is good agreement in the ranking of milk samples. The CMT gel can be influenced by the handling subjected to it by the operator (Whittlestone, 1971). In the above experiments both operators with no experience and operators with some experience have determined the viscosity of the milk reagent mixtures. Although their correlations to DMSCC are not as high as that of an experienced operator (Table 5) these experiments support the premise that it is not essential to have special training to operate the Ruakura rolling ball viscometer. Some degree of technical expertise would, however, be desirable. With continued use of this instrument all operators could approach the levels of accuracy shown in Table 5.

OPERATING SYSTEM WITH INCREASED THROUGHPUT

Because there is a certain amount of idle time in the operation of a single instrument it has been found that one operator can use two instruments in an alternate system. A rapid, effective system of operating two instruments with a throughput of 120 samples/hour is shown in figure 32.

SAMPLE NUMBER					
1	D	B	A	C	E
2	C	E	D	A	B
3	B	C	E	D	A
4	A	D	B	E	C
5	E	A	C	D	B
6	A	D	E	B	C
7	D	C	A	E	B
8	E	B	C	A	D
9	C	E	B	D	A
10	B	A	D	C	E

TABLE 14

Randomised Latin square experimental design. Operators randomly selected a letter at start of Experiment 2.

SAMPLE NUMBER					
1	7.2	7.2	6.7	7.6	8.0
	7.0	7.5	8.0	8.0	8.0
2	6.5	4.5	4.9	5.7	4.5
	5.7	5.2	4.2	6.8	4.5
3	4.8	5.1	6.1	5.1	5.7
	4.9	5.0	5.6	5.1	6.4
4	5.0	4.3	4.3	4.9	4.4
	4.7	4.7	4.3	4.8	5.8
5	7.2	6.6	6.4	6.4	6.3
	7.2	6.7	7.7	6.4	6.3
6	8.7	7.6	8.4	7.8	8.4
	7.9	7.5	8.3	7.7	8.8
7	7.5	8.2	7.6	8.3	7.8
	7.5	7.7	7.6	8.0	7.7
8	4.3	3.0	3.9	3.5	3.4
	3.8	3.3	3.5	3.7	3.6
9	7.6	7.6	7.6	7.4	8.3
	8.2	7.1	7.1	8.0	8.1
10	3.8	4.3	3.6	5.2	4.2
	3.8	4.0	3.8	4.3	3.7

TABLE 15

Results obtained from different operators on 10 samples of herd milk with the Ruakura rolling ball viscometer, Latin square design.

ANALYSIS OF VARIANCE

SOURCE OF VARIATION	SUM OF SQUARES	DEGREES OF FREEDOM	MEAN SQUARE
SAMPLES	253.7124	9	28.1903
OPERATORS	8.4464	4	2.1160
TIME OF TEST	2.0984	4	0.5246
RESIDUAL	6.8532	32	0.2142
DUPLICATES	6.1500	50	0.1230
TOTAL	277.2604	99	

SAMPLE EFFECT Ftest = 130.6074***
OPERATOR EFFECT Ftest = 9.8786***
TIME OF TEST EFFECT Ftest = 2.4491^{+}
DUPLICATE EFFECT Ftest = 0.5742 (not significant)

	MILK SAMPLE									
OPERATOR	1	2	3	4	5	6	7	8	9	10
1	4	6	7	8	5	1	3	10	2	9
2	3.5	7	6	8	5	1.5	1.5	10	3.5	9
3	4	6	8	7	5	1	2	10	3	9
4	4	7	6	8	5	2	3	10	1	9
5	3	7.5	6	7.5	5	1	2	9	4	10

W = 0.958

^{2} = 43.1***

TABLE 16

Milk samples from Experiment 2 after arranging ranks by operators.

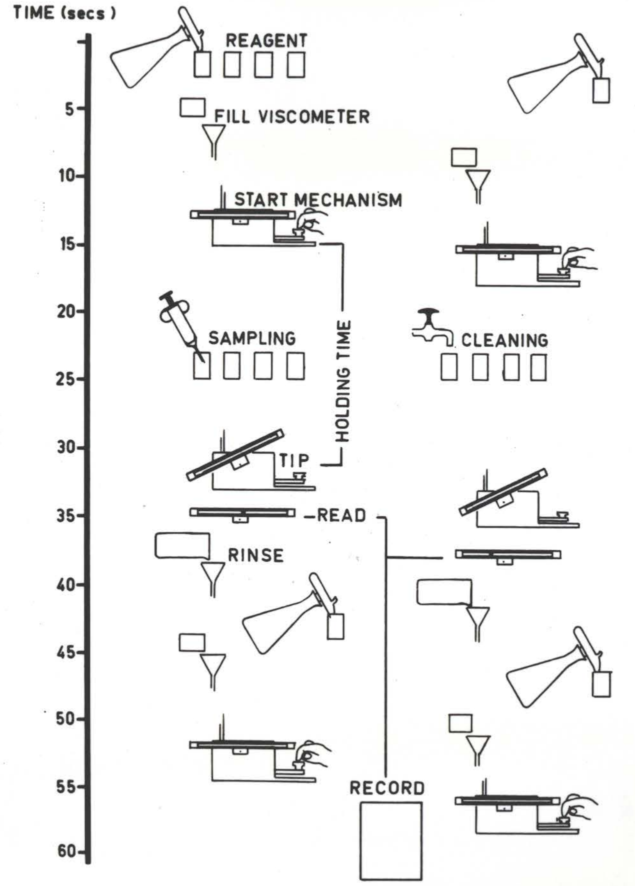

FIGURE 32

Operating system with two viscometers in an alternate system to give a throughput of 120 samples per hour.

VISCOMETER WITH ELECTRONIC CONTROL SYSTEM

The Ruakura rolling ball viscometer used in this study has some mechanical limitations. The timing sequence depends on a dual cam mechanism and the minute adjustments necessary during standardisation are time consuming and difficult.

The new unit is controlled by standard Pye High Level Industrial Logic and the tipping of the tube is brought about by the use of a reversible synchronous motor (Phillips type OU5100) fitted with a standard 10RPM gear box. A general view of this viscometer is shown in figure 33.

The control circuit is shown in figure 34. As in the case of the earlier models of the viscometer the control pinch valve is associated with a microswitch (S1 in the figure) which initiates the timing cycle. The position of the pinch valve has been altered as this position is more suitably placed for automation of some of the steps of the operating cycle.

The closing of S1 latches in the OR-gate 1 so initiating the timer T1 which is set to a delay period of 20 seconds. When the output of T1 is turned on it closes the AC switch (AC S1) thus connecting phase to motor terminal M1 and causing the motor to run in such a direction as to tip the tube to the appropriate angle. When the angle of tilt of 25° is reached the microswitch S2 is closed so latching on OR-gate 2 and inhibiting or unlatching OR-gate 1, thus turning off the AC S1 and stopping the motor. When the output of timer 2 is turned on, after an adjustable period (set by the variable resistance on the logic controller) which is the basis of calibration of the instrument, AC S2 turns on connecting motor terminal 2 (M2) to phase so reversing the motor. On reaching the horizontal position the micro-switch S3 is closed inhibiting Or-gate 2 turning off timer 2 and AC S2 and stopping the motor.

The layout of the instrument is shown in figure 33. The industrial logic unit is separate from the viscometer tube assembly and may be placed on a shelf or mounted on a wall away from any possible contamination. The viscometer tube and assembly is water-proof and not susceptible to milk or reagent spillage.

In the earlier instrument the time of tilting was affected by altering the spacing of the two cams. In the new instrument the calibration is affected by rotating the control knob of R2, the resistance controlling the time interval of timer 2 (figure 34). R2 consists of a fixed and variable component giving a range of 2 - 4.5 seconds. The holding period of timer 1 is set with a "trimpot" type of resistance and a range of holding times is possible for experimental purposes.

Preliminary tests suggest this device will be more reliable and easier to calibrate than the earlier mechanical system. The only part requiring special construction is the carriage for the viscometer tube and the supporting rod and pinch valve for regulating liquid flow into the system.

Dr W.G. Whittlestone developed the control system for this viscometer and much of the foregoing description is drawn from his work.

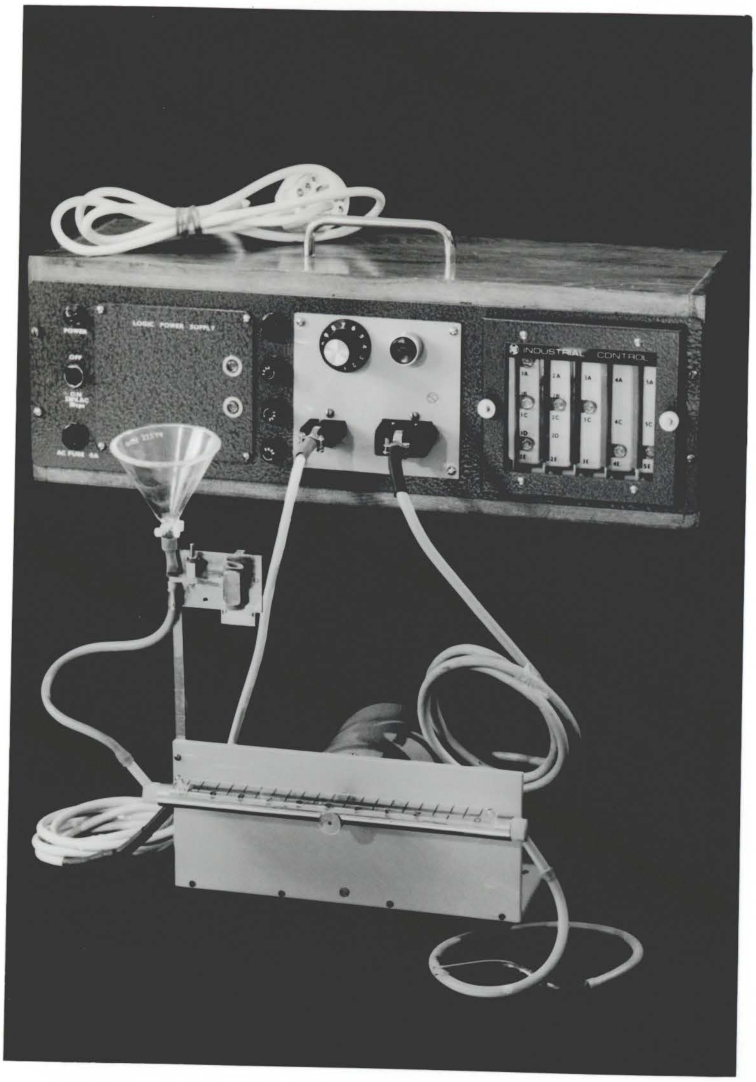

FIGURE 33

General view of the Ruakura rolling ball viscometer controlled by Pye high level logic.

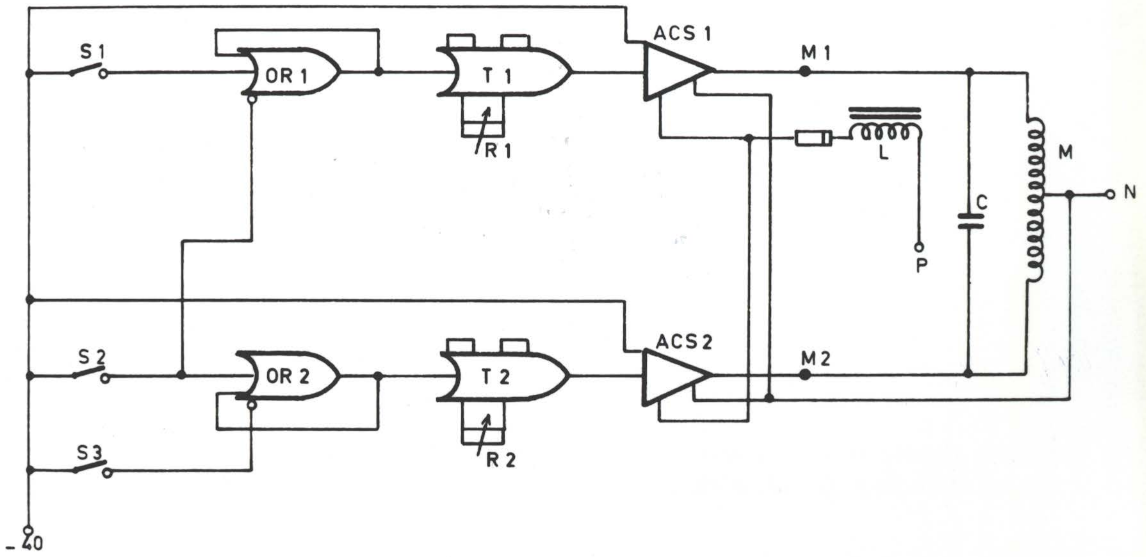

FIGURE 34

Control circuit for the Ruakura rolling ball viscometer with Pye high level logic.

CONCLUSIONS

Somatic cells in milk can be detected by the California Mastitis Test (CMT). Upon the addition of a reagent to the milk sample there is a change in viscosity, the degree of which intensifies as the somatic cell count of the milk sample increases. The Ruakura rolling ball viscometer has been developed to measure the viscosity of the CMT gel.

THE RUAKURA ROLLING BALL VISCOMETER

The Ruakura rolling ball viscometer determines viscosity as a function of distance/unit time a stainless steel ball rolls down an inclined tube filled with the liquid under test. The Viscometer Reading is inversely related to the viscosity of the mixture. The physical function of the viscometer follows Stokes' Law.

The Ruakura rolling ball viscometer can be used to measure the viscosity developed by the CMT reaction and has a high correlation ($r = 0.92$) to the somatic cell content of the milk sample.

The viscometric reaction of milk and the CMT reagent (secondary alkyl sulphate) varies with time. A holding time of approximately 25 seconds is required before the viscosity is determined. Prior to this time the viscosity developed is variable and after this holding time the viscosity progressively decreases. The findings of Carré (1970) with respect to the requirement of a holding time are verified. The Ruakura rolling ball viscometer has a 26 second holding time before any determination of viscosity is made.

NATURE OF THE CMT REACTION

The viscous reaction in milk is correlated ($r = 0.91$) to the DNA content of the milk sample. As the concentration of DNA increases the viscosity increases proportionally to $(\text{DNA})^2$ and the increase is similar to that of glycerol concentration. Deviations between the two systems are due to non-newtonian nature of the CMT gel and the susceptibility of the CMT gel to shear forces during measurement.

Somatic cells suspended in Normal Saline exhibit a similar type of reaction to that of milk. In herd milk fat % and protein % as such do not affect the viscosity although in model systems with milk of high cell count or with somatic cells proteins can have significant effects on the viscosity developed.

Somatic cells in milk undergo typical changes in the CMT reaction. As the concentration of reagent increases the margins of the somatic cells become altered and fibrillar extensions emanate from the margins of the cell. At the "normal use" concentration of reagent the nuclei of the somatic cells are involved and fibrillar extensions extend between nuclear loci. This network becomes more extensive as somatic cell numbers increase. The fibrillar network causes the apparent increase in viscosity.

These fibrils are shear sensitive and if broken do not reform. This gives a rheomalaxic gel. Any instrument designed to measure the viscosity of this gel must apply only moderate shear forces to prevent breakdown of the effective component of viscosity. The Ruakura rolling ball viscometer applies a moderate shear force only and that only once in the course of a determination.

OPERATION OF THE RUAKURA ROLLING BALL VISCOMETER

A throughput of 120 samples per hour can be obtained using two Ruakura rolling ball viscometers alternately.

The age of a milk sample tested must be less than 24 hours if held at room temperature. The use of boric acid as a preservative will extend this time as will refrigeration.

Operators' ranking of a series of herd milk samples with the Ruakura rolling ball viscometer was the same.

The Ruakura rolling ball viscometer determines the viscosity of the CMT gel and the value obtained agrees well with direct microscopic somatic cell counting and estimation of the DNA content of the milk sample.

REFERENCES

American Public Health Assn., Inc., 1967. "Standard Methods for the examination of Dairy Products" Twelfth Ed. W.G. Walter Ed. American Public Health Assn., Inc. New York 279-94.

Ashworth, U.S., 1966. "Rapid method for the determination of casein in milk by the dye binding method for the detection of mastitis". J. Dairy Sci., 49, 537-40.

Astermark, S., 1969a. "Studies in direct cell counting in herd bulk milk". Nord. Vet.-Med., 21, 23-26.

___________ 1969b. "The reproducibility of reactions using the California Mastitis Test and the Whiteside Test". Nord. Vet.-Med., 21, 193-202.

Balkovoĭ, I.I., 1967. "Dimastin for diagnosing bovine mastitis from the teat milk". Dairy Sci. Abstr., 30, 2438.

Bernstein, M.H., 1956. "Study of deoxyribonucleoprotein gels". Proc. natn. Acad. Sci. U.S.A., 42, 703-7.

Bird, R.C., & R.M. Turian, 1964. "Non-Newtonian flow in a rolling ball viscometer". Ind. Eng. Chem. Fundamentals, 3, 87-88.

Blackburn, P.S., 1965. "A solution for use in assessing the cell count of cow's milk". Brit. vet. J., 121, 154-58.

Boland, H., 1964. "Warning : Too much abnormal milk". Amer. Milk Rev., 26, 116-118, 175.

Bottazzi, V., 1963. "Methods for detection of mastitic milk". Latte, 37, 755-59.

Brander, G.C., 1972. "Clinical problems in preventive medicine. The control of mastitis". *Br. vet. J. 128*, 58-63.

Brazis, A.R., 1968. "Direct microscopic somatic cell count in milk". *J. Milk Food Technol.*, *31*, 350-54.

__________, A.L. Reyes, C.B. Donnelly, R.B. Read, & J.T. Peeler, 1967. "Comparison of results of mastitis screening tests of milk from individual and pooled cow quarters". *J. Dairy Sci.*, *50*, 500-04.

Brookbanks, E.O., 1970. Lecture to DAO(F) Hamilton.

Brus, D.H.J., F.H.J. Jaartsveld, E. van Werven, & H.J. Bannenberg, 1966. "Vergelijking van partijan boter bereid uit melk met een laag-en melk met een hoog celgehalte". *Neth. Milk Dairy J.*, *20*, 37-47.

__________ & __________, 1971a. "Comparison of batches of Gouda cheese made from bulk milk with a high and low cell count". *Neth. Milk Dairy J.*, *25*, 221-23.

__________ & __________, 1971b. "Comparison of batches of spray-dried milk powder prepared from milks with a high and low cell count". *Neth. Milk Dairy J.*, *25*, 221-23.

Büchler, G., 1965. "Suitability of the Brabant Mastitis Reaction for use in an udder health service". *Dairy Sci. Abstr.*, *29*, 4010.

Carré, X., 1970. "*Effet des leucocytes sur la viscosité du lait dans l'epreuve au lauryl sulfate de sodium*". Ecolé Nationalé Vétérinaire de Lyon No.22, 1970.

Carroll, E.J. & O.W. Schalm, 1962. "Effect of deoxyribonuclease on the California test for mastitis". J. Dairy Sci., 45, 1094-97.

Ceriotti, G., 1952. "A microchemical determination of desoxyribonucleic acid". J. Biol. Chem., 198, 297-303.

Chapman, H.R. & J. Burnett, 1972. "Seasonal changes in the physical properties of milk for cheese-making". Dairy Indust., April 1972, 207-211.

Christ, W., 1962. cited Nageswararao & Derbyshire (1969) Dt. tierärztl Wschr., 69, 108.

Copley, A.L., L.C. Krchma, & M.E. Whitney, 1942. Cited Copley & Thorley, 1959. J. Gen. Physiol., 24, 49.

__________ & R.S. Thorley, 1959. "Apparatus for the measurement of viscosity and wall adherence". Flow properties Blood. Biol. Systems, Proc. Informal Discussion. Oxford Engl., 1959, p 361-68.

Cullen, G.A., 1966a. "Cells in milk". Vet. Bull., 36, 337-46.

__________ 1966b. "Direct milk test for mastitis". Vet. Rec., 78, 297.

Custer, E.W., 1971. "Age of raw tank milk related to bacterial count and to Wisconsin Mastitis Test". J. Dairy Sci., 54, 449.

Davidson, J.N., I. Leslie, & J.C. White, 1951. "Quantitative studies on the content of nucleic acids in normal and leukaemic cells, from blood and bone marrow". J. Path. Bacter., 63, 471-83.

Davis, J.G. & J. MacClement, 1939. "Studies in mastitis V. Mastitis in relation to cheese making". J. Dairy Res., 10, 94-107.

Dedié, K. & G. Kielwein, 1960. "Alkylarylverbindungen als Reagens zur Ermittlung von Sekretionsstorungen des Euters beim Rind". Rindertuberk. u. Brucellose, 9, 19-27 & 35-43.

Dounce, A.L. & K.J. Monty, 1955. "Factors influencing the ability of isolated cell nuclei to form gels in dilute alkali". J. biophys. biochem. Cytol., 1, 155-60.

Feagen, J.T., A.T. Griffin, & G.T. Lloyd, 1966. "Effects of subclinical mastitis on heat stability of skim milk and skim milk powder". J. Dairy Sci., 49, 940-44.

__________, A.F. Hehir, & L.F. Bailey, 1970. "Factors influencing the heat stability and curd firmness of bovine milk". Proc. Int. Dairy Congr., XVIII, 1E, 525.

Fell, L.R., W.G. Whittlestone & H. de Langen, 1971. "Factors affecting the viscometric method for estimating the somatic cell count of cows' milk". J. Milk Food Technol., 34, 82-84.

Fernández-Martín, F., 1972. "Influence of temperature and composition on some physical properties of milk and milk concentrates". J. Dairy Res., 39, 75-82.

Flowers, A.E., 1914. "Viscosity measurement and a new viscosimeter". Proc. Amer. Soc. Test. Mater. 17th Ann. Meeting, 14, 565-616.

Funk, C.D., L.H. Schultz, & G.H. Barr, 1967. "Investigations on the possible use of mastitis screening tests in Dairy Herd Improvement Central Laboratories". J. Dairy Sci., 50, 47-52.

Green, F.A., 1971. "Interactions of a nonionic detergent. II. With soluble proteins." *J. Colloid Interface Sci.*, *35*, 481-85.

Green, Margaret L., 1971. "The specificity for K-casein as the stabiliser of αs-casein and β-casein. II Replacement of κ-casein by detergents and water soluble polymers". *J. Dairy Res.*, *38*, 25-31.

Hampton, O. & H.E. Randolph, 1969. "Influence of mastitis on properties of milk. II.Acid production and curd firmness". *J. Dairy Sci.*, *52*, 1562-65.

Hauke, H., 1967. "Weitere untersuchungen über die spezifität der Feulgen-reaktion mit milch und ihre beziehungen zum desoxyribonukleinsäuregehalt". *Milchwissenschaft*, *22*, 269-73.

__________ & V. Lutting, 1966. "Untersuchungen über die Eignug der Feulgen-Reaktion zur schnellen Bestimmung des Zellegehaltes der Milch". *Milchwissenschaft*, *21*, 620-24.

Harrison, D.E. & R.B. Gosser, 1965. "Rolling ball viscometer for use at temperatures to 400°C under pressures to 5 kilobars". *Rev. Sci. Instru.*, *36*, 1840-43.

Heesschen, W., 1966. "Protein content of raw milk and its relation to secretory disturbances of the mammary gland". *Proc. XVII Int.Dairy Congr.*, *A*, 391-98.

Hess, E. & B. Egger, 1969. Cited Tolle *et al*. 1971. *Schweiz landw. Forsch.*, *8*, 141.

Hietaranta, M., 1962. "The relation between the Whiteside test and the renneting of milk". Proc. Int. Dairy Congr., B, 577-61.

Horne, R.A. & R.S. Johnson, 1966. "The viscosity of water under pressure." J. Phys. Chem., 70, 2182-90.

Hubbard, R.M. & G.G. Brown, 1943. "The rolling ball viscometer". Ind. Eng. Chem. Anal. Ed., 15, 212-18.

Hutjens, M.F., L.H. Schultz, G.E. Ward, & S. Yamdangi, 1970. "Estimation of somatic cells in milk using membrane filter separation and DNA determination with diphenylamine". J. Milk Food Technol., 33, 227.

Imanshi, A., Y. Momotani, & T. Isemura, 1965. "The interaction of detergents with proteins. The effect of detergents upon the conformation of Bacillus subtilis α-amylase and Bence-Jones protein". J. Biochem., 57, 417-29.

Ĭotov, Ĭ., 1967. "Surface-active agents as reagents for testing milk for mastitis". Dairy Sci. Abstr., 29, 4021.

Jaartsveld, F.H.J., 1961. "Bijdradge tot de diagnosteik van mastitis in het kader van een georganiseerde bestrijding". Tijdschr. Diergeneesk, 86, 184-91.

________________, 1962a. "Contribution to the diagnosis of mastitis in cattle in connection with the mastitis control". Neth. Milk Dairy J., 16, 260-64.

______________, 1962b. "De uitvoering en de waarde van de B.M.R. (Brabantse Mastitis Reactie) bij een georganiseerde mastitis bestrijding". Tijdschr. Diergeneesk, 87, 1069-77.

Janzen, J.J., 1971. "Flavour characteristics of normal and abnormal milk". J. Milk Food Technol., 34, 352-53.

___________, 1972. "The effect of somatic cell concentration on the shelf-life of the processed product". J. Milk Food Technol., 35, 112-14.

___________, & W.L. Northen, 1972. "The role of somatic cell concentration in milk flavor preference and acceptance". 67th Ann. Meeting Amer. Dairy Sci. Assn.

Jensen, P.T., 1957. "Undersogelser over Whiteside-proven og C.M.T.-proven til pavisning af mastitissekret i leverander maelk." Nord. Vet.-Med., 9, 590-608.

Juffs, H.S.,1972. "Evaluation of a method for the preservation of milk samples for bacteriological examination". Aust. J. Dairy Technol., 27, 95-97.

Kernohan, Elizabeth A. 1968. "Observations on the practical use of the Rapid Mastitis Test." Aust. J. Dairy Technol., 23, 129-30.

___________________, 1970. "The relationship between viscosity measurement and the cell count of milk". Proc. XVIII Int. Dairy Congr., 1E, 625.

Kiermeier, F. & K. Keis, 1964a. "Effect of milk from mastitic cows on the quality of cheese and butter". Z. Lebensmittuntersuch., 124, 184-88. Dairy Sci.Abstr., 26, 1854.

____________ & __________, 1964b. "The behaviour of milk in cheesemaking from cows affected by secretory disturbances". Milchwissenschaft, 19, 79-82.

____________ & __________, 1964c. "Halbquantitative Ausarbeitung des Schalm-testes für wissenschaftliche Zweke". Milchwissenschaft, 19, 65-69.

____________ & A. Probst, 1968. Cited Brus & Jaartsveld, 1971a. Mitt. Rindergesuch. Dienstes, 20, 12.

King, J.O.L., 1969. "The effect of mastitis on the freezing point of cows' milk". Br. vet. J., 125, 25-29.

Kisza, J. & A. Kruk, 1970. "Changes in heat stability of the proteins in mastitic milk". Proc. Int. Dairy Congr., 1E, 527.

Kitchen, B.J. 1971. "Bovine milk esterases". J. Dairy Res., 38, 171.

Kiyama, R., 1955. "Viscosity of gases under high pressure". Mem. Fac. Ind. Arts., Kyoto Tech. Univers. Sci. and Technol., No.4, 19-35. Chem. Abstr., 50, 16186 i.

__________, & T. Makita, 1951. "A new simple viscometer for compressed gases and viscosity of carbon dioxide". Rev. Phys. Chem. Japan, 21, 63-68. Chem.Abstr., 46, 3807b.

__________, & __________, 1952. "The viscosity of carbon dioxide ammonia, acetylene, argon and oxygen under high pressures". Rev. Phys. Chem. Japan, 24, 74-80. Chem. Abstr., 49, 7909e.

______________, & ______________, 1956. "Improved viscometer for compressed gases and the viscosity of oxygen". *Rev. Phys. Chem. Japan*, *26*, 70-74. *Chem. Abstr.*, *51*, 12555d.

Klastrup, O., 1956. "Clinical, biochemical and bacteriological effects of mastitis produced experimentally with staphylococci". *Nord. vet.-Med.*, *8*, 193-223.

Knauer, A., 1931. Cited Brus & Jaartsveld, 1971a. *Dt. tierärztl Wschr.*, *34*, 579.

Kostov, L. & T.S. Dzhurov, 1968. "Diagnosis and prevalence of sub-clinical mastitis in cows". *Dairy Sci. Abstr.*, *30*, 3171.

Konrad, V., & L. Slanina, 1966. "Detergents in diagnosis of mastitis and their relation to other methods of diagnosis". *Dairy Sci. Abstr.*, *30*, 984.

Kroger, D. & D.E. Jasper, 1966. "Effect of milk age, storage and testing temperatures upon the Wisconsin Mastitis Test Score". *J. Dairy Sci.*, *50*, 833-36.

Kuz'menko, V.S. & A.S. Bogorad, 1958. "A field viscometer". *Zavodskaya Lab.*, *24*, 899-900. *Chem. Abstr.*, *55*, 9973h.

de Langen, H., 1967. "Determination of DNA in milk". *Aust. J. Dairy Technol.*, *22*, 36-40.

Lenk, R.S., 1968. "*Plastics Rheology*" MacClaren and Sons Ltd London p.21.

Leonard, W.J. & J.F. Foster, 1961. "Changes in optical rotation in the acid transformations of plasma albumin. Evidence for the contribution of tertiary structure to rotary behaviour." J. Biol. Chem., 236, 2662-9.

Lewis, H.W., 1953. "Calibration of the rolling ball viscometer". Anal. Chem., 25, 507-08.

McFarlane, D., P.S. Blackburn, J.F. Malcolm, & A.L. Wilson, 1949. "A comparison of ante-mortem and post-mortem findings in bovine mastitis". Vet. Rec., 61, 807-10.

McIndoe, W.M., & J.N. Davidson, 1952. "The phosphorous compounds of the cell nucleus". Brit. J. Cancer, 6, 200-14.

Makita, T., 1954. "The viscosity of freons under pressure". Rev. Phys. Chem. Japan, 24, 74-80. Chem.Abstr., 49, 7909e.

Martens, R., M. van Belleghem, R. Vanderpoorten, & M. Naudts, 1971. "Gouda cheese made from bulk milk with high or low initial cell content". Milchwissenschaft, 26, 13-17.

Matschullat, G., 1963. "The Brabant Mastitis Reaction, a new method for determining abnormalities in milk by investigating can milk samples". Dairy Sci. Abstr., 28, 580.

Métais, P., S. Cuny, & P. Mandel, 1951. "Pentosenucleic acid content of leucocytes of various species of mammals and man in particular". Compt. rend. soc. biol., 145, 1235-38.

Muldoon, P.J. & B.J. Liska, 1971. "Chloride ion activity electrode for the detection of abnormal milk". *J. Dairy Sci.*, *54*, 117-19.

Murphy, J.M. & J.J. Hanson, 1941. "A modified Whiteside test for the detection of chronic bovine mastitis". *Cornell Vet.*, *31*, 47.

Nageswararao, G. & H.E. Calbert, 1969. "A comparison of screening tests to detect abnormal milk". *J. Milk Food Technol.*, *32*, 365-68.

________________ & J.B. Derbyshire, 1969a. "Studies on the mechanism of gel formation in the California Mastitis Test reaction". *J. Dairy Res.*, *36*, 359-68.

________________ & ________________, 1969b. "Isolation of milk leucocytes and their nuclei". *J. Dairy Sci.*, *52*, 1451-52.

________________ & ________________, 1970. "Studies on the mechanism of the Whiteside mastitis test reaction". *J. Dairy Res.*, *37*, 77-82.

Nichols, G. de la M., 1970. *Research in the New Zealand Department of Agriculture: Annual Report of Research Division 1969-70*. N.Z. Govt Printer p.60.

____________________ & D.S.M. Phillips, 1972. "A rotary viscometer for leucocyte count determinations in milk". *Aust. J. Dairy Technol.*, *27*, 134-137.

Niki, R., I. Kato, & S. Arima, 1971. "Studies on the influence of sodium dodecyl sulphate on the polymerization of β-casein." *Milchwissenschaft*, *26*, 141-46.

Nilsson, G., 1957. "Studies concerning the reducing properties of milk. The reducing systems in milk obtained under aseptic conditions from healthy and mastitic cows". Lantbrukshögsk. Ann., 23, 73-122.

Northen, W.L. III, 1970. "Abnormal milk as determined by leucocyte count and change in composition". Diss. Abstr. Int., Sect.B, 31, 2390.

Obiger, G., 1961. "Warum ist der Schalm Test kein zuverlässiges Mastitis Diagnostikum? Versuch einer Deutung seines Wirkungsmechanismus". Arch. Lebensmitt Hyg., 12, 226-33.

Ogur, M. & G. Rosen, 1950. "Nucleic acids of plant tissues I. Extraction and estimation of desoxypentose nucleic acid and pentose nucleic acid". Arch. Biochem., 25, 262-76.

Oksamitnӯī, N.K., 1967. "Diagnosis of sub-clinical mastitis with surface active agents". Trudӯ vses. naucho-issled. Inst. vet. Sanit., Probl. vet. Sanit., 28, 68-73.

Paape, M.J., H.D. Hafs, & H.A. Tucker, 1964. "Relationship of Feulgen-DNA in milk and of Milk Quality Test (MQT) to the number of milk somatic cells". J. Milk Food Technol., 27, 228-30.

__________, H.A. Tucker, & H.D. Hafs, 1965. "Comparison of methods for estimating milk somatic cells". J. Dairy Sci., 48, 191-96.

Pattison, I.H. & I.M. Smith, 1953. "The histology of experimental Streptococcus dysagalactiae mastitis in goats". J. Path. Bact., 66, 247-50.

Post, R. & F.H.J. Jaartsveld, 1966. "De waarde van de Brabantse mastitis reaktie (B.M.R.) als diagnostikum bij de mastitis-bestrijding". Tijdschr.Diergeneesk, 91, 1292-1302.

Postle, D.S., 1964. "The Wisconsin Mastitis Test". Proc. U.S. Live Stk Sanit. Ass., 1964, 488-94.

____________, 1971. "Effects of aging of milk samples on screening test results". Proc. Nat. Mastitis Council Inc., 1971, 25-26.

____________ & A.R. Smith, 1965. "Application of the Wisconsin Mastitis Test under field conditions". J. Milk Food Technol., 28, 310-13.

Prescott, S.C. & R.S. Breed, 1910. "The determination of the number of body cells in milk by a direct method". J. Infect. Dis., 1, 632-40.

Read, R.B. Jr., A.L. Reyes, J.G. Bradshaw & J.T. Peeler, 1969. "Evaluation of seven procedures for detection of abnormal milk due to mastitis". J. Dairy Sci., 52, 1359-67.

Renner, E., F. Kiermeier & M. Djafarin, 1967. "Einfluß erhöhter Leukozyten-Ausscheidung auf chemische und technische Eigenschaften de Milch. 6. Mitt. : Einfluß auf Eigenschaften der Milch vor und nach ihrer molkereitechnischen Verarbeitung". Milchwissenschaft, 22, 285-89.

Richter, R.L., H.E. Randolph & A.W. Rudnick, Jr., 1968. "Factors affecting the Wisconsin Mastitis Test". J. Milk Food Technol., 31, 289-92.

Robins, A.B., 1964. "Non-Newtonian behaviour of dilute DNA (deoxyribonucleic acid) solution". Trans. Faraday Soc., 60, 1344-48.

Roguinsky, M., 1969. "Détection des mammites par le test au Teepol appliqué au lait de troupeau". Rech. vétér., 1969, 41-48.

Roughley, F.R., A.D. McClure & W.J.A. Percy, 1965. "Application of a modification of Brabant Mastitis Reaction". J. Milk Food Technol., 28, 396-98.

Schalm, O.W., 1962. "A syllabus on the bovine mammary gland in health and disease" Lecture notes. Univ. of California.

__________ & D.O. Noorlander, 1957. "Experiments and observations leading to the development of the California Mastitis Test". J.A.V.M.A., 130, 199-204.

__________, J. Lasmanis, & E.J. Carroll, 1964. "Pathogenis of experimental coliform (*Aerobacter aerogenes*) mastitis in cattle". Amer. J. vet. Res., 25, 75-83.

__________ & __________, 1968. "The Leukocytes : origin and function in mastitis". J.A.V.M.A., 153, 1688-94.

Schultze, W.D., 1968. "Design of eyepiece reticules for use in the direct microscopic somatic cell count method". J. Milk Food Technol., 31, 344-49.

__________, 1970. "Microscopic counting of somatic cells in milk". Proc. XVIII Int. Dairy Congr., 1E, 621.

__________, 1971a. "Use of the DMSCC as a screening test". Proc. Nat. Mastitis Council, 1971, 24.

___________, 1971b. "Performance in microscopic counting of somatic cells in milk (1) Effects of procedural variations on accuracy and precision". J. Milk Food Technol., 34, 453-57.

___________ & J.W. Smith, 1969. "A procedure to minimise differences in expected coefficient of variation in the direct microscope somatic cell count". J. Milk Food Technol., 32, 477-79.

___________, ___________, D.E. Jasper, O. Klastrup, F.H.S. Newbould, D.S. Postle, & W.W. Ullmann, 1971. "The direct microscopic somatic cell count as a screening test for control of abnormal milk". J. Milk Food Technol., 34, 76-77.

Scott Blair, G.W., 1969. "Elementary Rheology" 158 p Academic Press Inc. (London) Ltd.

_______________ & J.C. Oosthuizen, 1960. "Rolling-sphere viscometer for structured liquids". Br. J. Appl. Physics, 11, 332-34.

Scruggs, R.L., & P.D. Ross, 1964. "Viscosity study of DNA". Biopolymers, 2, 593-609.

Seeleman M., 1964. "Über den Zellgehalt der Milch, Seine Feststellung, Bedeutung und Beurteilung." Milchwissenschaft, 19, 182-94.

Sheely, M.L., 1932. "Glycerol viscosity tables". Indust. Eng. Chem., 24, 1060-4.

Siegel, S., 1956. "Nonparametric Statistics for the Behavioural Sciences" McGraw-Hill Book Company, Inc. p. 229-38.

Sinell, H.J. & J. Neuschultz, 1965. "Zum Vorkommen von Leukozyten in der Milch von gesunden kühen". Milchwissenschaft, 20, 344-51.

Slanina, L., V. Konrád, & A. Pauerová, 1965. "Diagnosis of mastitis in the field and in the laboratory. Comparison of field tests with laboratory results". Dairy Sci. Abstr., 28, 2513.

Smith, J.W., 1969. "The Standardisation of cell counting procedures and screening tests used in abnormal milk control programmes". Proc. Nat. Mastitis Council Inc., 1969, 77-85.

Stanley, L.H. & R.C. Batten, 1968. "Rolling ball viscometer for measuring viscosity of fluids at high pressures and moderate temperatures". Anal. Chem.,40, 1751-53.

Suteu, R. & I.R. Giurgea, 1971. "Modifications des protéines sériques et des fractions électrophorétiques, en relation avec le leucocytogramme dans la babésiellose des Bovins". Rec. Méd. Vet., CXLVII, 413-21.

Taylor, G. & B.J. Kitchen, 1970. "Enzyme levels in mastitic milk". Proc. XVIII Int. Dairy Congr., 1E, 624.

Thompson, D.I. & D.S. Postle, 1964. "The Wisconsin Mastitis Test - an indirect estimation of leucocytes in milk". J. Milk Food Technol., 27, 271-75.

Thörne, H., 1962. "Ein automatischer Apparat in der Mastitisdiagnostic". Berl. Münch tierärztl Wschr., 75, 47-48.

Tolle, A., 1970. cited Tolle et al. 1971. Schweizer Arch. Tierheilk, 112, 512.

_______________, W. Heeschen, J. Reichmuth, & H. Zeidler, 1971. "Counting of somatic cells in milk and possibilities of automation". Dairy Sci. Abstr., 33, 875-79.

Vendrely, R., 1955. "The deoxyribonucleic acid content of the nucleus " in "The Nucleic Acids" E.N. Chargaff & J.N. Davidson, eds. Academic Press Inc., New York, Vol.II, 155-80.

_____________ & C. Vendrely, 1948. "The desoxyribonucleic acid content of various organs of individual and different species of animals". Experientia, 4, 434-6.

_____________ & ____________, 1949. "The desoxyribonucleic acid content of nuclei of various organs in different species of animals". Experientia, 5, 327-9.

Ward, G.E. & D.S. Postle, 1970. "Studies using the direct microscopic somatic cell count". J. Milk Food Technol., 33, 389.

___________ & L.H. Schultz, 1971. "Modification of the Filter-DNA method of estimating somatic cells in milk". Proc. 66th Ann. Meeting Amer. Dairy Sci. Assn. June, 1971.

Whiteside, W.H., 1939. "Observations on a new test for the presence of mastitis in milk". Canad. Publ. Health J., 30, 44.

Whittlestone, W.G., 1971. "The measurement of the somatic cell content of milk". Proc. N.Z. School and Conf. on Machine Milking. 3. Milk Quality. Dept. of Univ. Extension, The Univ. of Auckland.

________________ & H. de Langen, 1965. "The cell count of milk and rapid tests for mastitis". Proc. N.Z. Soc. Animal Production, 25, 137-51.

________________ & L.R. Fell, 1965. "A viscometer for routine mastitis tests". Proc. 36th Ann. Conf., N.Z. Dairy Sci. Ass., 21-22.

________________ & D.J. Allen, 1966. "An automatic viscometer for the measurement of the California Mastitis Test reaction". Aust. J. Dairy Tech., 12, 138-39.

________________, L.R. Fell & H. de Langen, 1970. "A viscometric method for the estimation of milk cell count". J. Milk Food Technol., 33, 351-54.

________________, H. de Langen & L. Cate, 1972. "A simple semi-automatic viscosimeter for the estimation of somatic cells in milk". Milchwissenschaft, 27, 84-87.

Widstrom, G., 1928. "The applicability of the Schiff fuschin-sulfurous acid reaction to the determination of thymonucleic acid." Biochem. Z., 199, 298-306.

Addendum 3: The new references are:

Gordon et al., 1972 J. Dairy Sc. 55, 261;
Kaminogawa and Yamauchi, 1972 Agr. Biol. Chem. 36, 255.

APPENDIX 1

PHYSICAL THEORY OF RUAKURA ROLLING BALL VISCOMETER

A) Linear Approximation of Stokes' Law

Within the limits $10 > VR > 1$ the linear regression of η on inverse of VR gives a good approximation to the relationship derived from Stokes' Law (for this derivation see below).

$$\text{i.e } \eta = \frac{41.15}{VR} - 2.47$$

$$\text{let } X = VR$$

This expression could be rearranged to give:

$$\eta = \frac{1 - JX}{KX}$$

where J, K are appropriate constants.

This is a special case of Stokes' Law and applies only to the conditions of use of the Ruakura rolling ball viscometer as described in this study.

A more general form of this type of equation can be shown to be derived from Stokes' Law.

$$A\eta v = \frac{4}{3}\pi r^3(\rho_{ball} - \rho_{liquid})\, g \sin\theta - B\rho_{liquid}\, v^2$$

STOKES' LAW

Constants are:

$A, B, \pi, r, \rho_{ball}, g, \theta$

$$\text{Let } \frac{4}{3}\pi r^3 g \sin\theta = C$$

$$A\eta v = C\,(\rho_{ball} - \rho_{liquid}) - B\rho_{liquid}\, v^2$$

$$\eta = \frac{C\,(\rho_{ball} - \rho_{liquid}) - B\rho_{liquid}\, v^2}{Av}$$

$$\eta = \frac{(\rho_{ball} - \rho_{liquid}) - \frac{B}{C}\rho_{liquid}\, v^2}{\frac{A}{C}v}$$

Let $\frac{B}{C} = D$

and $\frac{A}{C} = E$

$$\eta = \frac{(\rho_{ball} - \rho_{liquid}) - D\rho_{liquid} v^2}{E}$$

But average velocity $v = \frac{d}{t} = \frac{x}{t}$

x = VR = viscometer reading = distance of ball's travel

t = time = CONSTANT

$$\eta = \frac{(\rho_{ball} - \rho_{liquid}) - D\rho_{liquid} \frac{x^2}{t}}{E\frac{x}{t}}$$

Let $\frac{D}{t^2} = F$

and $\frac{E}{t} = G$

$$\eta = \frac{(\rho_{ball} - \rho_{liquid}) - F\rho_{liquid} x^2}{G\,x}$$

This general form of the equation would apply to all rolling ball viscometers measuring distance of travel in a fixed time and would suit all operating conditions of the Ruakura rolling ball viscometer (e.g. different angles of inclination from the vertical or different tipping times).

B) Solution of Stokes' Law Equation

The equation for Stokes' Law given above can be solved for the Ruakura rolling ball viscometer using the glycerol data obtained at 25°C. The physical data for the glycerol solutions is obtained from Sheely (1932). A and B are constants that have to be determined experimentally. Values for these constants for the Ruakura rolling ball viscometer as used in this study can be obtained by least squares analysis.

$$A\eta v = \frac{4}{3}\pi r^3(\rho_{ball}-\rho_{liquid})\, g \sin\theta \quad - B\rho_{liquid} v^2$$

$$\Sigma[A\eta v - \frac{4}{3}\pi r^3(\rho_{ball}-\rho_{liquid})\, g \sin\theta \quad + B\rho_{liquid} v^2]^2 = 0$$

$$\Sigma\eta v\,[A\eta v - \frac{4}{3}\pi r^3(\rho_{ball}-\rho_{liquid})\, g \sin\theta + B\rho_{liquid} v^2] = 0$$

$$\Sigma\rho_{liquid} v^2\,[A\eta v - \frac{4}{3}\pi r^3(\rho_{ball}-\rho_{liquid})\, g \sin\theta + B\rho_{liquid} v^2] = 0$$

$$\Sigma[A\eta^2 v^2 - \frac{4}{3}\pi r^3(\rho_{ball}-\rho_{liquid})\, g \sin\theta\,\eta v \quad + B\eta\rho_{liquid} v^3] = 0$$

$$\Sigma[A\eta\rho_{liquid} v^3 - \frac{4}{3}\pi r^3(\rho_{ball}-\rho_{liquid})\, g \sin\theta\,\rho_{liquid} v^2 + B(\rho_{liquid})^2 v^4 = 0$$

$$A\Sigma\eta^2 v^2 \quad + B\Sigma\eta\rho_{liquid} v^3 = \frac{4}{3}\pi r^3 g \sin\theta\,\Sigma(\rho_{ball}-\rho_{liquid})\eta v$$

$$A\Sigma\eta\rho_{liquid} v^3 \quad + B\Sigma(\rho_{liquid})^2 v^4 = \frac{4}{3}\pi r^3 g \sin\theta\,\Sigma\rho_{ball}-\rho_{liquid})\rho_{liquid} v^2$$

Solving simultaneously

$$A = \frac{4}{3}\pi r^3 g \sin\theta\,\frac{[\Sigma(\rho_{ball}-\rho_{liquid})\eta v][\Sigma(\rho_{liquid})^2 v^4] - [\Sigma(\rho_{ball}-\rho_{liquid})\rho_{liquid} v^2][\Sigma\eta\rho_{liquid} v^3]}{[\Sigma\eta^2 v^2][\Sigma(\rho_{liquid})^2 v^4] - [\Sigma\eta v\rho_{liquid} v^2]^2}$$

$$B = \frac{4}{3}\pi r^3 g \sin\theta\,\frac{[\Sigma\eta^2 v^2][\Sigma(\rho_{ball}-\rho_{liquid})\rho_{liquid} v^2] - [\Sigma\eta\rho_{liquid} v^3][\Sigma(\rho_{ball}-\rho_{liquid})\eta v]}{[\Sigma\eta^2 v^2][\Sigma(\rho_{liquid})^2 v^4] - [\Sigma\eta\rho_{liquid} v^3]^2}$$

to yield $A = 7.3140$

$B = 3.0951$

This can be reduced to:

$$\eta = \frac{5.55(\rho_{ball}-\rho_{liquid})}{V.R.} - 0.24\rho_{liquid}(V.R.)^3$$

which is of the form predicted in part A above.

APPENDIX 2

DIRECT MICROSCOPE SOMATIC CELL COUNT (DMSCC)

Microscope counting methods have been used since first proposed by Prescott and Breed (1910). The method described here is modified from that proposed by the National Mastitis Council Inc.

MATERIALS

(i) Loeffler's Methylene Blue

Take 30 ml of 0.8% w/v methylene blue in ethanol, 99 ml distilled water, mix and add 1 ml of 1% w/v potassium hydroxide in distilled water. Filter into a stock bottle.

(ii) Fixative and Defatting Solution

Glacial acetic acid (4 ml), 44 ml tetrachloroethane and 52 ml ethyl alcohol were mixed together and stored in a tightly stoppered bottle.

METHOD

1. The sample was mixed by inverting the bottle 25 times; 0.01 ml was transferred from the bottle to a clean microscope slide by means of a pipette.
2. The drop of milk was spread evenly in a smear 1 cm sq. by means of a thin wire rod. The drop was spread over this area by drawing the wire back and forth, care being taken not to overlap the sides so making the square greater than 1 cm sq. The wire was lifted from the centre of the smear. N.B. All smears were prepared in duplicate.
3. The smear was allowed to dry at room temperature.
4. The smear was fixed and defatted in solution (ii) for 2 minutes.
5. The slides were rinsed in 95% w/v alcohol, the excess

alcohol shaken off and allowed to dry at room temperature.

6. The slides were stained with Loeffler's Methylene Blue, rinsed in 95% w/v alcohol and allowed to dry at room temperature.

7. The smear was covered with a thin layer of microscope oil.

8. Somatic cells were counted in two continuous perpendicular strips through the mid portion of the smear. An oil immersion lens was used on the microscope. N.B. Both duplicate smears were counted to give four observations.

Calculation of cell Numbers

The width of the field of the microscope objective was measured, using a stage micrometer. The factor for converting the observed average to an estimate of the number of somatic cells per ml was ascertained:

e.g. width of field = 0.12 mm.

Area observed in one smear = 0.12 mm x 10 mm

= 1.2 sq.mm.

Proportion of area observed = $\frac{100}{1.2}$

To convert to cells/ml (as smear only 0.01 ml)

$= \frac{100}{1.2} \times 100$

= 8333

MICROSCOPE FACTOR = 8 000.

The average of the four observations was multiplied by this factor to give an estimate of the total number of somatic cells per ml.

APPEARANCE OF CELLS AFTER STAINING WITH METHYLENE BLUE

(a) EPITHELIAL CELLS. The columnar epithelial cells appeared as large indistinct cells approximately 10 to 20μ in diameter, and were generally of irregular shape. They were usually without a well defined nucleus, which, if it is apparent, is stained blue.

(b) LEUCOCYTES. These cells were generally spherical in shape and average 5 to 10μ in diameter. In milk smears they generally appeared much smaller than epithelial cells. The neutrophils were the most distinctive cells in the milk smear, with a pale blue lobed nucleus and dark purple-red granular cytoplasm. The lymphocytes had a spherical, pale blue nucleus and little cytoplasm. N.B. The size of the cells given above is approximate as it is altered by fixation, depth of smear and drying. The size of the epithelial cells varies considerably as they are usually discarded cells which have ceased to function and consequently their appearance in smears is rather different from their appearance in histological sections of the udder.

The cytoplasms of lymphocytes and epithelial cells are differently stained by methylene blue. The staining reaction is partly dependent upon the length of staining time. Newly made solutions of stain should be tested to determine whether they give the correct reaction with the cells in a smear.

RESULTS

The somatic cell counts of 158 samples of different milks were determined, (mean somatic cell count, 6.75×10^5, range $0.04 - 18.00 \times 10^5$ cells per ml). The average coefficient of variation was 17.55% (range 2.37% - 62.18%; standard deviation 8.81). The distribution of the coefficients of variation is shown in Figure 35. In general the smears with the higher number of cells have the largest standard deviation (calculated within the sample).

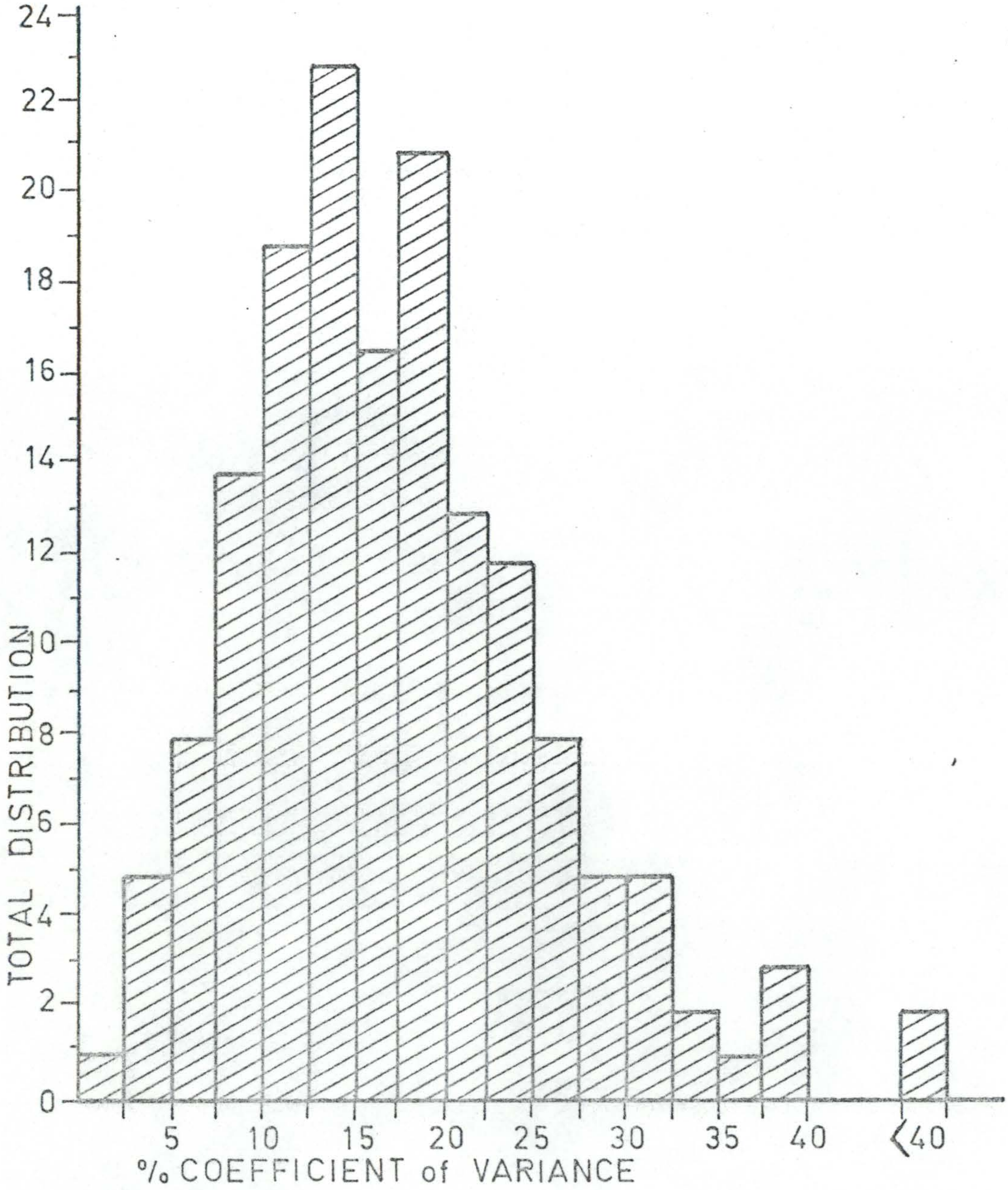

FIGURE 35

Distribution of coefficients of variation for DMSCC of 158 milk samples. Range of somatic cell counts (0.04 - 18.00) x 10^5, mean 6.75 x 10^5.

Average coefficient of variation : 17.56

Standard deviation : 8.81

APPENDIX 3

CHEMICAL ESTIMATION OF SOMATIC CELLS

The deoxyribonucleic acid (DNA) content of cell nuclei is relatively constant; thus the DNA content of milk has been used to estimate cell numbers.

FEULGEN-DNA MEASUREMENT OF SOMATIC CELLS IN MILK

MATERIALS

(i) N Hydrochloric acid.

(ii) Schiff's Reagent

One g basic fuchsin (National Aniline, C.I. No.4250) was dissolved in 200 ml boiling distilled water, cooled to 50°C using an ice bath, and 20 ml N Hydrochloric acid was added immediately. The solution was further cooled to 25°C and 2.0 g granular sodium metabisulphite was added. The solution was stored overnight (10 - 15 hr) in a tightly stoppered glass container in the dark at room temperature. After this period 0.5 g of activated charcoal was added to the solution and shaken vigorously for 1-2 min then filtered rapidly through a Whatman No.1 filter paper in a Buchner funnel under suction.

N.B. This reagent may be used immediately, but is only stable up to 3 weeks. It must be stored in a well stoppered bottle in the dark. If any pink colouration appears in the solution it must be discarded.

METHOD

1. Milk (2 ml) was pipetted into a clean 18 x 150 mm test tube, 2 ml N HCl was added. The tube and contents were heated to 60°C in a water bath for 24 min to hydrolyse the sample.

2. The tubes were removed from the water bath and 4 ml Schiff's reagent was added immediately. The mixture was

stirred thoroughly on a vortex mixer.

3. The colour is fully developed after 1 hr and stable for at least 5 hr.

4. The mixture was stirred and scored by comparing the colour intensity of the treated milk sample with the standard colour chart (available on request from Dept of Dairy Science, Michigan State University, East Lansing, Michigan, 48823, U.S.A.).

N.B. The reaction has also been assessed by centrifuging the samples at a RCF of 200 for 5 min and scoring the colour of the packed sediment (Nageswararao and Calbert, 1969) and by reflectance spectrophotometry (Paape *et al.*, 1965).

RESULTS

The reproducibility of Feulgen-DNA colour was low in milk samples containing less than 4 000 000 somatic cells/ml. The herd milks used in this study ranged from 34 500 - 1 800 000 cells/ml and in this range very poor differentiation was obtained with the Feulgen-DNA method. In herd milk a sample with more than 1 000 000 somatic cells/ml is indicative of a severe herd mastitis problem (Brander, 1972). The Schiff's reagent used for DNA colour development is highly sensitive to light, moisture and oxidation by atmospheric oxygen and must be prepared every few days. It is also difficult to handle, because of its acid fumes and because all extraneous organic material with which it comes in contact is stained pink.

DETERMINATION OF DNA IN MILK (de LANGEN'S METHOD)

MATERIALS

(i) Saturated Potassium chloride AR.

(ii) Ethanol 95% w/v AR.

(iii)Trichloroacetic acid AR. (TCA) (BDH Chemicals Ltd) 5% w/v solution in distilled water.

(iv) Hydrochloric acid, concentrated AR. (BDH Chemicals Ltd) diluted 1:1 with distilled water.

(v) Indole (Eastman Kodak Co., Rochester, N.Y.) : 80 mg was dissolved in 75 ml warm distilled water, cooled and made up to 100 ml volume.

(vi) Chloroform AR. (BDH Chemicals Ltd) Purified as described by Ceriotti (1952).

METHOD

Concentration of Somatic Cells.

1. The somatic cells were separated from the milk by a modification of the method of Ogur and Rosen (1950) : 4 ml milk was pipetted into a clean 10 ml centrifuge tube and 6 ml of a cold saturated solution of KCl was added and centrifuged at RCF of 2 500 for 20 min. After centrifuging the tube was cooled if necessary to harden the cream layer. The skim milk was then discarded by holding back the cream layer with a scalpel.

2. The residue was washed twice with warm (70 - 75°C) ethanol, centrifuged for 3 min at RCF 2 500 after each washing and the ethanol layer discarded.

Hydrolysis

3. TCA solution (4 ml) was added to the washed sediment and heated in a water bath at 90°C for 15 min.

4. After cooling the tube was centrifuged for 5 min at RCF of 2 500 and the whole of the supernatant liquid

transferred to a boiling tube with stopper.

Colour Reaction

5. Two ml HCl and 2 ml freshly prepared indole solution were added to the 4 ml of hydrolysate. The solution was mixed on a vortex mixer, heated for 15 min in boiling water and then cooled in running cold water.

Removal of Interfering Material.

6. Six ml chloroform was added to the boiling tube which was stoppered and shaken. The interfering colour was extracted by the chloroform. The supernatant layer was transferred to a centrifuge tube and this aqueous solution clarified by centrifuging for 3 min at RCF of 2 000.

Estimation of DNA Content.

7. The optical density was determined at 490 nm using a 10 mm cell in a Beckman D.U. spectrophotometer. The recorded optical density was compared with values obtained with standard DNA solutions.

RESULTS

The regression of DNA content (μg/ml) on DMSCC (cells/ml x 10^5) was of the form:

$$\text{DNA} = 0.566^{***}_{(\pm\ 0.030)}\ \text{DNA} + 1.42 \text{ ; RSD } 0.733$$

The correlation coefficient (r) was 0.884. (Figure 36)

DISCUSSION

The positive intercept on the Y axis is probably due to some artefact in the DNA method - ideally it would be expected that the graph would pass through the origin; a sample with no somatic cells would have no DNA content provided there was no excessive bacterial contamination. (Bacteria contain approximately 10^{-3} times the DNA found in an equal number of somatic cells). Lactose does not appear to influence the measurement of DNA in herd milk as the partial regression coefficient is non-significant.

There is good agreement between this method and other reported measurements of DNA in cells of bovine origin. The amount of DNA found per 10^6 somatic cells by this method is 7.08 μg of DNA. Other reports put the value per 10^6 cells at:

6.4 μg Vendrely and Vendrely (1949)

6.5 μg Vendrely and Vendrely (1948)

6.9 μg Metais _et_ _al_. (1951)

7.0 μg Davidson _et_ _al_. (1951)

7.1 μg McIndoe and Davidson (1952)

9.0 μg (apx.) Hutjens _et_ _al_. (1970)

CONCLUSION

The linear relationship between DNA content (calculated from optical density) and DMSCC indicate this procedure is an accurate reflection of cell numbers. The good agreement with other measurements of DNA in cells of bovine origin show this procedure estimates DNA content with good precision. This data supports the concept that the DNA content per cell is constant.

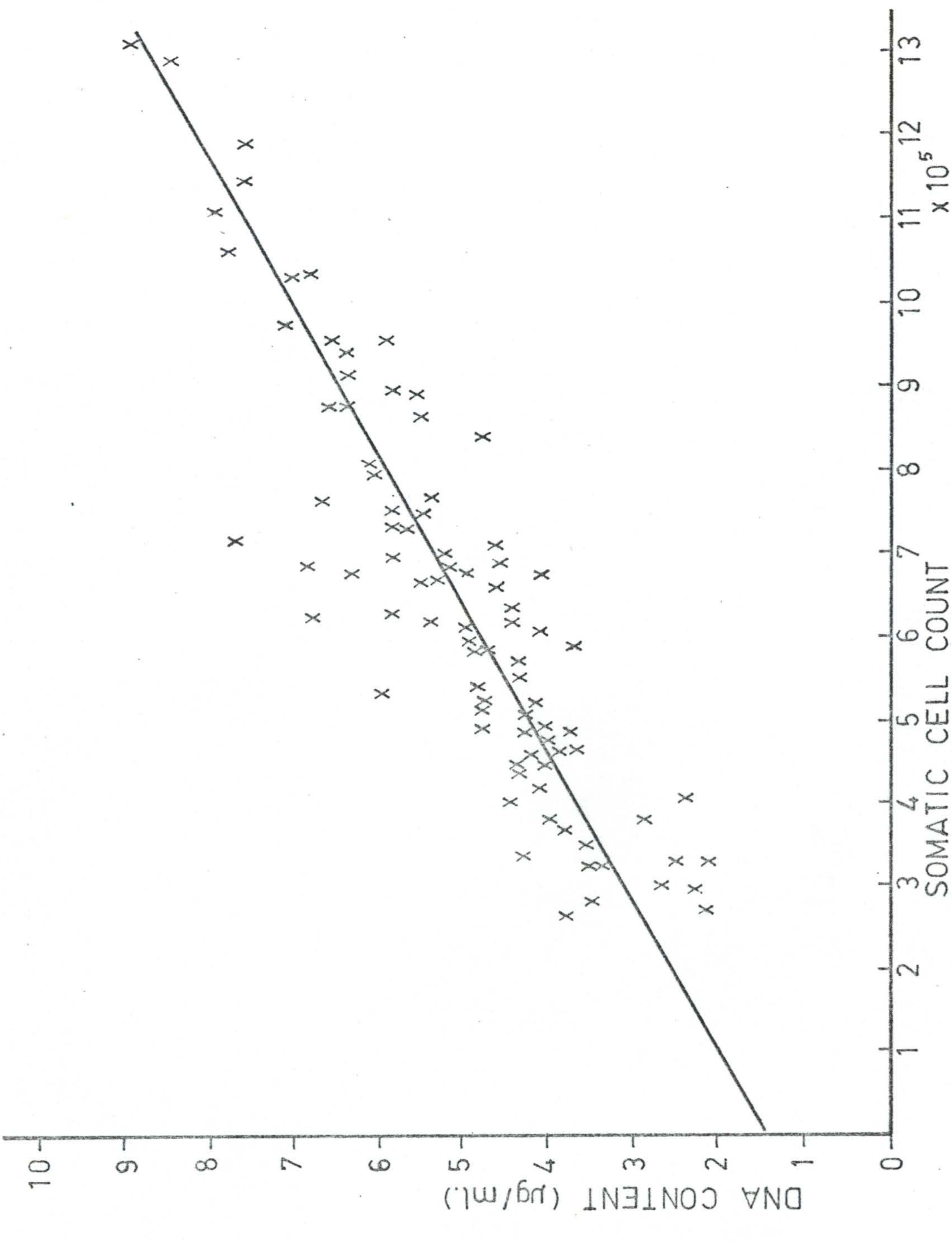

FIGURE 36

Relationship between DNA content (µg/ml) and Direct Microscopic Somatic Cell Count (DMSCC) on samples of herd milk.

$$\text{DNA} = 0.566^{***}_{(\pm\ 0.030)}\ \text{DMSCC} + 1.42\ ;\ \text{RSD}\ 0.733$$

APPENDIX 4

CALIFORNIA MASTITIS TEST

The California Mastitis Test (CMT) is a presumptive test for estimating the somatic cell content of milk. This test evolved from the need for a simple, rapid and reliable test for products of inflammation in milk that could be conducted at the side of the cow.

MATERIALS

(i) CMT Reagent

The most commonly used reagents for the test are the alkylaryl sulphonates and secondary alkyl sulphates (Dedié and Kielwein, 1960; Bottazzi, 1963; Buchler, 1965; Roughley et al., 1965; Slanina et al., 1965; Konrad and Slanina, 1966; Balkovoi, 1967; Ǐotov, 1967; Oksamitnȳi, 1967; Kostov and Dzhurov, 1968; Roguinsky, 1969). Blackburn (1965) used a mixed reagent of secondary alkyl sulphate and the sodium salt of a sulphated ethoxylated fatty alcohol.

A common example of a CMT reagent is Shell "Teepol 610" made up to a concentration of 4% w/v active ingredient in water. The reagent is dispensed from a polyethylene squeeze bottle.

(ii) Four compartment plastic paddle to conduct the test.

METHOD

A small amount of milk (2-3 ml) is drawn from each individual quarter of the udder into a compartment of the plastic paddle. The volume of milk is standardised by tilting the paddle and an equal (or slight excess) of the reagent is added (Kernohan, 1968). The paddle is swirled gently to thoroughly mix the milk and reagent for a period of 10 seconds after which the reaction is scored. The paddle is rinsed in water and the excess moisture shaken off before it is reused.

The original workers scored the reaction on a five point scale but in practice a three point scale is adequate (Table 17).

DISCUSSION

Although the CMT was originally intended to test individual quarter milks at the side of the cow, its application to bucket milk of a single cow or of bulk tank milk from a whole herd has afforded a rapid screening test for the evidence of mastitis. It is important that the amount of reagent should be equal or greater than that of the milk if reasonably reproducible results are to be achieved (Kernohan, 1970). Cell levels can be given for different classes of reaction but considerable overlapping and large standard deviations can be expected (see review by Milne, in press). A disadvantage is the test's subjective nature having scores representing a range of somatic cell counts rather than a definite value. Milks gradually decline in reactivity and the age and thermal history of bulk samples must be known.

RESULTS

Eight operators ranked a series of milk samples using the CMT. Reaction classes and the range of somatic cell count (DMSCC) are presented (Table 18).

CONCLUSION

Because of the subjective nature of this test in its original form different operators have difficulty in achieving comparable results. Within operators the ranking is comparable but between operators there is little agreement in absolute terms.

Reaction Class	Description of visible reaction
Negative	Mixture remains liquid with little or no evidence of the formation of a precipitate.
Suspicious	Distinct precipitate but little or no tendency towards gel formation. With some milks the reaction is reversible; continued movement of the paddle may cause the precipitate to disappear.
Positive	Mixture thickens immediately with evidence of gel formation. As mixture is swirled it tends to move towards the centre leaving bottom of outer edge of cup exposed. Viscosity may be so greatly increased that the mass tends to adhere to the bottom of the cup.

TABLE 17

Reaction classes of the CMT reaction

CMT score	DMSCC x 10^5
Negative	6.00 - 7.60 mean 6.75
Suspicious	6.800 - 33.00 mean 15.00
Positive	4.80 - 24.00 mean 12.00

TABLE 18

Variability of operator rankings in the CMT reaction.

APPENDIX 5

REGRESSIONS OF DNA, FAT %, AND PROTEIN % ON VISCOSITY AS MEASURED BY RUAKURA ROLLING BALL VISCOMETER

VISCOSITY Centipoise (Y)	DNA g/ml (X_1)	FAT % (X_2)	PROTEIN % (X_3)
2.99	3.6	4.49	3.24
13.33	7.3	4.35	3.45
17.06	7.8	4.19	3.07
8.62	5.8	4.00	3.16
3.73	4.6	3.97	3.22
8.55	4.5	4.08	3.28
6.64	5.7	4.22	3.34
9.97	6.9	4.13	3.23
3.21	4.6	3.99	3.16
1.97	3.5	4.12	3.16
9.60	6.5	4.25	3.24
2.64	4.1	4.63	3.55
10.77	6.2	3.93	3.22
4.35	4.3	4.45	3.31
8.93	6.2	4.31	3.35
7.79	6.1	4.23	3.23
3.38	3.8	4.05	3.22
9.26	6.6	4.16	3.39
12.20	7.2	3.90	3.08
9.97	6.6	4.45	3.09
2.28	3.4	4.20	3.31
11.69	6.5	4.00	3.40
3.06	3.8	4.55	3.46
5.26	4.2	4.14	3.19
3.93	5.1	4.42	3.31
6.85	5.8	4.14	3.17
2.91	4.6	4.31	3.25
11.22	8.0	4.23	3.43
2.52	4.6	4.40	3.20
2.02	4.3	4.48	3.29
8.05	7.0	4.31	3.34

VISCOSITY Centipoise (Y)	DNA g/ml (X_1)	FAT % (X_2)	PROTEIN % (X_3)
8.62	6.6	3.94	3.14
2.78	3.0	4.48	3.42
12.20	6.5	4.49	3.31
8.05	5.2	3.97	3.26
8.05	5.4	4.44	3.29
8.05	5.0	4.26	3.41
8.61	5.8	4.17	3.14
7.54	5.2	4.22	3.26
20.36	9.2	4.35	3.13
5.12	4.3	4.45	3.62
3.73	4.1	4.11	3.30
2.99	3.8	4.28	3.38
9.60	5.9	4.25	3.56
4.03	4.2	4.60	3.18
8.33	5.8	4.36	3.49
14.65	7.9	4.21	3.05
8.93	5.8	4.48	3.13
4.14	4.6	4.58	3.29
2.91	4.2	4.60	3.37
6.64	4.6	4.52	3.45
2.84	2.9	4.79	3.40
7.79	5.2	4.22	3.29
8.05	5.1	4.03	3.26
7.54	4.3	4.58	3.47
11.69	6.5	4.16	3.09

TOTALS AND MEANS

$Y = 408.03$ $\qquad \bar{Y} = 7.2863$

$X_1 = 300.30$ $\qquad \bar{X}_1 = 5.3625$

$X_2 = 239.62$ $\qquad \bar{X}_2 = 4.2789$

$X_3 = 184.03$ $\qquad \bar{X}_3 = 3.2863$

CORRECTED SUMS OF SQUARES

$(Y - \bar{Y})^2 = 883.3057$

$(X_1 - \bar{X}_1)^2 = 105.0512$

$(X_2 - \bar{X}_2)^2 = 2.4367$

$(X_3 - \bar{X}_3)^2 = 0.9369$

CORRECTED SUMS OF PRODUCTS

$(Y - \overline{Y})\ (X_1 - \overline{X}_1) = 278.0162$

$(Y - \overline{Y})\ (X_2 - \overline{X}_2) = -13.5014$

$(Y - \overline{Y})\ (X_3 - \overline{X}_3) = -8.1801$

$(X_1 - \overline{X}_1)\ (X_2 - \overline{X}_2) = -5.2552$

$(X_1 - \overline{X}_1)\ (X_3 - \overline{X}_3) = -3.1999$

$(X_2 - \overline{X}_2)\ (X_3 - \overline{X}_3) = 0.6623$

TRIVARIATE LINEAR REGRESSION

$b_1 = 2.6607 \pm 0.1778$

$b_2 = 0.1272 \pm 1.227$

$b_3 = 0.2590 \pm 1.944$

$a = -8.3772$

F test $= 86.53^{***}$

RSD $= 1.653$

$$\eta = 2.66^{***}_{(\pm\ 0.18)}\ \text{DNA} + 0.128_{(\pm\ 1.23)}\ \text{FAT \%} + 0.259_{(\pm\ 1.94)}\ \text{PROTEIN \%} - 8.38\ ;\ \text{RSD } 1.65$$

BIVARIATE LINEAR REGRESSION

Consideration of DNA and Protein % only

$b_1 = 2.6566 \pm 0.0177$

$b_2 = 0.3327 \pm 1.9250$

$a = 8.0532$

RSD $= 1.668$

$$\eta = 2.66^{***}_{(\pm\ 0.02)}\ \text{DNA} + 0.333_{(\pm\ 1.92)}\ \text{PROTEIN \%} - 8.05\ ;\ \text{RSD } 1.66$$

LINEAR REGRESSION

Consideration of DNA alone to viscosity ($r = 0.9396$)

$b = 2.6465 \pm 0.1311$

$a = -6.9055 \pm 0.7257$

F test $= 407.3^{***}$

RSD $= 1.344$

$$\eta = 2.65^{***}_{(\pm\ 0.13)}\ \text{DNA} - 6.90_{\ (\pm\ 0.73)}\ ;\ \text{RSD } 1.34$$

APPENDIX 6

"KENDALL'S COEFFICIENT OF CONCORDANCE". W

When we have K sets of rankings, we may determine the degree of association among them by using the Kendall coefficient of concordance W. Whereas r_s and τ express the degree of association between two variables measured in, or transformed to, ranks (Spearman rank correlation) W expresses the degree of association between K such variables. Such a measure can be particularly useful in studies to interjudge or intertest reliability, and also has applications in studies of clusters of variables.

METHOD

To compute W, we first find the sum of ranks Rj, in each column of a K x N table. Then we sum the Rj and divide that sum by N to obtain the mean value of the Rj. Each of the Rj values may then be expressed as a deviation from the mean value. Finally, S, the sum of squares of these deviations is found. Knowing these values, we may compute the value of W

$$W = \frac{S}{\frac{1}{12} K^2 (N^3 - N)}$$

where

S = sum of squares of the observed deviations from the mean of Rj, that is $S = \quad (Rj - \bar{R}j)^2$

K = number of sets of rankings e.g. the number of operators

N = number of entities (milk samples) ranked

$\frac{1}{12} K^2 (N^3 - N)$ = maximum possible sum of the squared deviations i.e., the sum S which would occur with perfect agreement among K rankings.

when N is larger than 7 compute

$X^2 = K\ (N-1)\ W$

which is approximately distributed as chi square with df = N-1.

If the value of X^2 as computed exceeds that in chi square tables at a particular level of significance and a particular value of df = N - 1, then the null hypothesis that the K rankings are unrelated may be rejected at that level of significance.

INTERPRETATION OF W

A high or significant value of W may be interpreted as meaning that the observers or judges are applying essentially the same standard in ranking the N objects under study. (Siegel, 1956).

APPENDIX 7

A COMPARISON OF RUAKURA ROLLING BALL VISCOMETER WITH A ROTARY (FERRANTI) VISCOMETER

Nichols (1970) and Nichols and Phillips (1972) have reported on a rotary viscometer to measure the viscosity of the CMT gel. A modified version of this viscometer* has been compared to the Ruakura rolling ball viscometer.

MATERIALS

Ruakura rolling ball viscometer

Ferranti (rotary) viscometer

Reagent : 4% v/v Shell Teepol 610 (for Ferranti viscometer)

METHOD

Samples of herd bulk milk were collected as previously described. The somatic cell content of these milks was determined by the DMSCC. The Ruakura rolling ball viscometer was used by the method outlined in this study.

Measurements with the Ferranti viscometer were carried out by the method of Nichols and Phillips (1972).

RESULTS

A summary of the results is shown in Table 19 and fuller details in Tables 20, 21 and 22.

---

* The rotary viscometer was kindly loaned by Mr D.S.M. Phillips, Ruakura Agricultural Research Centre. The modifications included a redesigning of the measuring head and different spring tensions were used than those reported by Nichols and Phillips (1972). These modifications have made this instrument more sensitive at lower viscosities (i.e. the viscosity developed by herd milk when a 4% solution of reagent is used).

DISCUSSION

The Ferranti viscometer has no advantages over the Ruakura rolling ball viscometer for measuring the viscosity of the CMT gel. The principle of this type of viscometer has been used in many applications, but Scott Blair and Oosthuizen (1960) found this principle could not operate on structured liquids because of the high shear forces. It is claimed this instrument has an advantage in that it measures the maximum viscosity of the CMT gel. Carré (1970) and also figure 18 shows that a "maximum" viscosity can occur before the completion of the 20 second holding time and this is not necessarily the viscosity to relate to the DMSCC.

Lenk (1968) claimed that spurious results can easily occur in rotational viscometry. These arise from the fact that at high shear rates the sample cavitates producing instability of shear stresses and as the shear geometry is no longer constant the readings are meaningless.

In a similar manner to that described by Thörne (1962) the measuring head of the Ferranti viscometer may collect bundles of fibres. This is observed in practice as fibrous portions of gel adhere to the head after completion of a reading. These fibres increase the drag on the head causing unreliable results. This necessitates washing the head between readings.

The higher standard deviation of the Ferranti viscometer is due to the difficulty experienced in reading. As the head is lowered into the spinning beaker a maximum reading is indicated; this stabilises about a mean value and with increasing time decreases. This is explained by Figure 18 but may be aggravated by strings of fibre on the head shearing thus decreasing the drag.

The Ferranti viscometer requires a larger sample of milk and the system is not as adaptable to using minimal amounts of milk as the Ruakura rolling ball viscometer. If provision was made for a holding time and washing the head between samples it would be difficult to obtain the throughput of 200 samples per hour claimed by Nichols and Phillips (1972).

CONCLUSION

The Ferranti viscometer used in this study has no advantages over the Ruakura rolling ball viscometer for measuring the viscosity of the CMT gel because

(a) the difficulty in reading gives a higher standard deviation and gives rise to less reproducibility between operators,

and (b) the higher shear forces and destruction of the gel give an unstable reading.

There should be provision for a holding time in the system of operation for the Ferranti viscometer.

	RUAKURA ROLLING BALL VISCOMETER	FERRANTI VISCOMETER
CORRELATION TO DMSCC (r)	- 0.93	0.75
ESTIMATED STANDARD DEVIATION*	0.22	0.37
KENDALL COEFF. OF CONCORDANCE	0.9576 X^2 =43.0943***	0.8015 X^2 =33.6615**

* Standard deviation has been calculated from the difference between duplicate readings on the same sample.

TABLE 19

Summary of comparison of Ruakura Rolling Ball Viscometer and Ferranti Viscometer.

DMSCC $\times 10^{-5}$	RUAKURA ROLLING BALL VISCOMETER READING*	FERRANTI VISCOMETER READING*
0.74	9.75	3.80
1.04	9.60	3.60
2.30	9.60	3.60
2.72	8.50	5.00
2.72	8.10	3.70
2.82	9.30	4.10
2.82	9.30	4.30
3.14	9.25	3.60
3.22	9.65	3.85
4.64	7.10	5.80
4.78	8.20	4.35
4.86	6.15	6.30
5.20	5.25	7.00
5.28	8.50	4.60
5.60	6.45	5.40
5.60	6.35	6.20
5.76	7.50	4.85
5.98	6.85	4.00
6.22	6.25	4.90
6.56	4.90	5.30
7.36	5.90	5.10
7.98	4.70	6.30
8.86	2.90	7.00
9.08	4.85	5.55
9.50	5.10	5.35
9.84	3.40	8.40
10.03	3.20	5.40
11.08	3.45	6.85
11.80	2.85	6.60
12.64	2.85	7.80

* Viscometer readings are mean of duplicates.

TABLE 20

Comparison of Ruakura rolling ball and Ferranti viscometer on the same samples of milk.

MILK SAMPLE	OPERATOR ONE	OPERATOR TWO	OPERATOR THREE	MILK TOTALS
1	4.0	3.6	4.9	12.5
2	5.4	5.3	4.2	14.9
3	6.8	6.0	5.0	17.8
4	3.6	4.3	3.9	11.8
5	3.6	4.1	3.9	11.6
6	6.6	5.3	7.7	19.6
7	4.4	5.1	3.9	13.4
8	7.0	8.8	6.8	22.6
9	4.6	4.6	3.9	13.1
10	4.9	4.7	4.2	13.8
11	5.4	5.1	4.6	15.1
12	6.9	6.8	5.2	18.9
13	6.3	4.9	5.5	16.7
14	5.6	4.9	4.4	14.9
15	5.1	4.6	5.4	15.1
OPERATOR TOTALS	80.2	78.1	73.5	GRAND TOTAL 231.8

TABLE 21

The results obtained by three different operators on 15 herd milk samples with the Ferranti viscometer.

ANALYSIS OF VARIANCE

SOURCE OF VARIATION	SUM OF SQUARES	DEGREES OF FREEDOM	MEAN SQUARE
OPERATORS	1.5658	2	0.7829
SAMPLES	45.8258	14	3.2733
RESIDUAL	16.1524	28	0.5769
TOTAL	60.4124	44	-

OPERATOR EFFECT F test = 5.6740^{***}

SAMPLE EFFECT F test = 1.3571^{***}

	MILK SAMPLE														
OPERATOR	1	2	3	4	5	6	7	8	9	10	11	12	13	14	15
1	3	8.5	13	1.5	1.5	12	4	15	5	6	8.5	14	11	10	7
2	1	11.5	13	3	2	11.5	9.5	15	4.5	6	9.5	14	7.5	7.5	4.5
3	9	5.5	10	2.5	2.5	15	2.5	14	2.5	5.5	8	11	13	7	12

$W = 0.8015$

$X^2 = 33.6615^{**}$

NOTE: For each operator's score the lowest reading was assigned the rank of 1.

Because of the large number of ties in the data the Kendall coefficient of concordance was corrected for tied results after the method described by Siegel (1956)

TABLE 22

Milk samples tested on Ferranti viscometer after ranking by operators.

APPENDIX 8

DATA USED IN LINEAR REGRESSIONS

VISCO-METER READING	DNA g/ml	DMSCC x 10^{-5}	VISCO-METER READING	DNA g/ml	DMSCC x 10^{-5}	VISCO-METER READING	DNA g/ml	DMSCC x10^{-5}
7.5	3.6	3.42	2.8	6.5	8.96	6.6	3.4	5.34
2.6	7.3	9.93	3.9	5.2	6.20	3.5	5.8	8.96
2.1	7.8	10.55	3.9	5.4	6.08	3.4	5.2	8.61
3.7	5.8	7.47	3.9	5.0	6.75	6.9	3.5	4.44
6.6	4.6	4.68	3.7	5.8	7.59	4.6	4.0	6.60
6.8	4.5	3.65	4.1	5.2	7.52	8.1	2.8	3.18
4.5	5.7	6.78	1.8	9.2	13.56	5.6	3.8	5.56
3.3	6.9	6.21	5.4	4.3	6.71	6.8	4.3	5.31
7.2	4.6	4.85	6.6	4.1	4.53	4.0	4.0	4.58
9.2	3.5	2.68	7.5	3.8	4.65	7.5	3.5	4.31
3.4	6.5	7.95	3.4	5.9	7.97	6.0	3.8	5.02
8.0	4.1	3.77	6.3	4.2	4.00	4.2	5.3	6.65
8.1	6.2	8.24	3.8	5.8	7.34	3.5	6.5	6.70
6.0	4.3	5.49	2.4	7.9	10.07	2.1	8.5	13.28
3.6	6.2	7.70	3.6	5.8	8.18	4.7	4.4	5.23
4.0	6.1	5.21	6.2	4.6	5.37	4.4	4.6	5.29
7.0	3.8	4.83	7.6	4.2	3.86	3.9	5.5	6.60
3.5	6.6	8.46	4.5	4.6	5.12	5.6	3.4	3.61
2.8	7.2	9.87	7.7	2.9	2.96	7.6	2.5	3.82
3.3	6.6	9.18	4.0	5.2	7.23	5.3	4.0	5.24
8.6	3.4	3.72	3.9	5.1	6.75	2.6	7.7	11.63
2.9	6.5	8.76	4.1	4.3	6.24	7.7	3.7	4.51
7.4	3.8	3.99	2.9	6.5	9.59	7.8	2.5	2.68
5.3	4.2	6.05	6.4	5.2	7.38	8.7	2.4	3.12
6.4	5.1	7.28	8.4	3.9	4.76	3.0	6.2	9.65
4.4	5.8	6.18	8.3	3.8	4.34	3.7	5.2	7.68
7.6	4.6	4.67	6.2	5.7	7.34	9.9	1.0	1.78
3.0	8.0	7.34	8.4	4.0	4.24	9.9	0.9	1.79
8.2	4.6	4.59	9.0	3.7	2.62	6.9	2.6	2.92
9.1	4.3	3.14	2.7	6.2	9.11	5.6	4.6	4.25
3.9	7.0	6.20	2.3	7.0	9.93	7.5	3.3	3.06
3.7	6.6	7.13	4.6	4.2	6.35	2.9	7.3	11.99
7.8	3.0	3.56	5.0	4.3	6.96	4.6	3.7	4.65
						5.3	3.7	4.40

The viscometer reading was tested in three forms

(1) as viscometer reading

(2) as Reciprocal of Viscometer reading

and (3) as viscosity calculated from linear regression of standard glycerol solution.

	Means	Standard deviation
Viscometer Reading	5.3220	2.1087
Viscosity	6.6927	3.9691
Reciprocal of Viscometer Reading	0.2226	0.0966
DNA	4.9190	1.5605
DMSCC	6.1823	2.4375

Simple Correlation Coefficients

	Viscometer Reading	Viscosity	Reciprocal Viscometer	DNA
Viscosity	-0.9189			
Reciprocal Viscometer	-0.9195	0.9995		
DNA	-0.8484	0.8864	0.8870	
DMSCC	-0.8566	0.9169	0.9165	0.8842

Sums of Squares

Viscometer Reading	440.2116
Viscosity	1559.5906
Reciprocal Viscosity	0.9239
DNA	241.0739
DMSCC	588.2208

	REGRESSION COEFFICIENTS			
	Viscometer Reading	Viscosity	Reciprocal Viscometer	DNA
DNA	-1.14642^{***} (±0.07226)	2.25442^{***} (±0.11896)	0.5491^{***} (±0.00289)	
DMSCC	-0.74106^{***} (±0.04509)	1.49297^{***} (±0.06565)	0.03632^{***} (±0.00160)	0.56605^{***} (±0.0302)

	CONSTANTS FOR REGRESSION EQUATIONS			
	Viscometer Reading	Viscosity	Reciprocal Viscometer	DNA
DNA	10.9612	-4.3968	-0.0475	
DMSCC	9.9034	-2.5373	-0.0020	1.4195

	RESIDUAL STANDARD DEVIATIONS			
	Viscometer Reading	Viscosity	Reciprocal Viscometer	DNA
DNA	1.1220	1.8471	0.0448	
DMSCC	1.0935	1.5923	0.0388	0.7326

POLYNOMIAL REGRESSION EQUATIONS

Simple correlation coefficients

	Viscosity		Viscosity
DNA	0.8864	DMSCC	0.9169
$(DNA)^2$	0.9129	$(DMSCC)^2$	0.9085
$(DNA)^3$	0.9035	$(DMSCC)^3$	0.8625
$(DNA)^4$	0.8751	$(DMSCC)^4$	0.7989
$(DNA)^5$	0.8355	$(DMSCC)^5$	0.7345

REGRESSION EQUATION; VISCOSITY AND $(DNA)^2$

$b = 0.22285^{***}$
(± 0.01007)

$a = 0.7633$

$RSD = 1.6284$

APPENDIX 9

DATA ON MILK AGING

Time (Hours)	Viscometer Reading	DNA g/ml	Total Plate Count x 10^6	Viscosity Centipoise
02	4.5	6.1		6.64
04	4.0	4.8		7.8
06	4.8	5.6		6.1
08	4.8			6.1
10	4.5	7.1	0.069	6.6
12	4.7	6.2		6.3
14	4.7			6.3
16	4.2	6.1		7.3
18	5.1		0.105	5.6
20	5.0	6.0		5.7
22	5.0			5.7
26	5.1	5.2	0.196	5.6
28	5.0			5.7
30	5.2	5.1		5.4
32	5.4			5.1
34	5.5	8.2	0.920	5.0
36	5.4			5.1
38	6.1	7.2		4.2
40	6.0			4.4
42	6.2	7.5	0.600	4.1
45	5.9			4.5
48	6.1			4.2
50	6.4	6.3	1.61	3.9
52	6.2			4.1
54	5.8		5.0	4.6
56	5.8			4.6

Data from experiment on milk aging at 5°C

Total Plate Counts were conducted approximately every 8 hours (expected generation time of organisms in milk)

Time (Hours)	Viscometer Reading	DNA g/ml	Total Plate Count x 10^6	Viscosity Centipoise
02	4.0	6.2		7.8
04	5.2	5.1		5.4
06	5.1	7.4		5.6
08	4.6			6.4
10	4.5	5.8	0.049	6.6
12	4.8	6.3		6.1
14	4.8			6.1
16	4.6	5.9		6.4
18	5.3		0.125	5.3
20	5.0	6.1		5.7
22	5.0			5.7
26	5.2	5.7	0.610	5.4
28	5.1			5.6
30	5.4	6.1		5.1
32	5.6			4.8
34	5.7	8.5	1.33	4.7
36	5.6			4.8
38	6.3	10.1		4.0
40	6.1			4.2
42	6.4	8.1	41.5	3.9
45	6.2			4.1
48	6.5			3.8
50	7.0	8.7	4.7	3.4
52	7.0			3.4
54	7.2		86	3.2
56	7.0			3.4

Data from experiment on milk aging at 15°C

Time (Hours)	Viscometer Reading	DNA g/ml	Total Plate Count x 10^6	Viscosity Centipoise
02	4.0	5.8		7.8
04	4.6	6.3		6.4
06	5.0	4.8	0.029	5.7
08	4.7			6.3
10	4.5	6.6	0.047	6.6
12	4.9	5.2		5.9
14	4.9		0.100	5.9
16	4.5	6.0		6.6
18	5.0		0.275	5.7
20	5.2	5.6		5.4
22	5.0		1.990	5.7
26	5.4	5.1	14.7	5.1
28	6.0			4.3
30	6.3	8.4	16.2	4.0
32	8.0			2.6
34	7.8	10.2	30.6	2.8
36	8.0			2.6
38	8.6	11.2	263	2.3
40	8.7			2.2
42	9.0	16.1	605	2.1
45	8.8			2.2
48	9.2		2440	2.0
50	9.4	18.4		1.9
52	9.7			1.7
54	10.0^+		5600	1.6
56	-			

Data from experiment on milk aging at 20°C

	NO PRESERVATIVE		BORIC ACID (1% w/v)	
Time (Hours)	Viscometer Reading*	Viscosity centipoise	Viscometer Reading*	Viscosity centipoise
04	1.05	36.7	0.85	45.9
08	0.75	52.4	0.80	48.9
12	1.10	34.9	1.00	38.6
16	1.05	36.7	1.30	29.1
24	0.90	43.2	1.05	36.7
28	1.15	33.3	0.95	40.8
32	1.30	29.1	1.15	33.3
36	1.20	31.8	0.95	40.8
40	1.10	34.9	1.20	31.8
48	7.40	3.1	1.50	24.9
52	8.40	2.40	1.35	28.0
56	10	1.6	1.60	23.2
60	-		2.20	16.2
64	-		1.80	20.4
72	-		7.90	2.7
76	-		9.05	2.0
80	-		10	1.6

Data from experiment to test preservatives.

($20^{\circ}C$ data only)

APPENDIX 10

GLOSSARY OF SOME ABBREVIATIONS AND SYMBOLS

A - K	Mathematical Constants
CMT	California Mastitis Test
DMSCC	Direct Microscopic Somatic Cell Count
DNA	Deoxyribonucleic acid
F	Force
g	acceleration due to gravity = 980.3 cm/sec
r	radius of ball
t	time (seconds)
v	velocity (cm/sec)
W	Kendall coefficient of concordance
x	distance (cm)
x^2	Chi squared
η	Eta viscosity (centipoise)
π	Pi = 3.1416
ρ	Rho density
Σ	Sigma summation
$\sin \theta$	sine of angle of tilt for rolling ball viscometers

SYMBOLS FOR STATISTICAL SIGNIFICANCE

a,b,c,d	Duncans multiple range test, 5% level of significance
+	significant at 10% level
*	significant at 5% level
**	significant at 1% level
***	significant at 0.1% level